www.befrest.com

PRODUCT CATALOG

HIOSSEN

HIOSSEN Design features

www.befrest.com

HiOssen Implant,

We stand out with our passion for strategic R&D and innovative products, creating globally trend-setting implants.

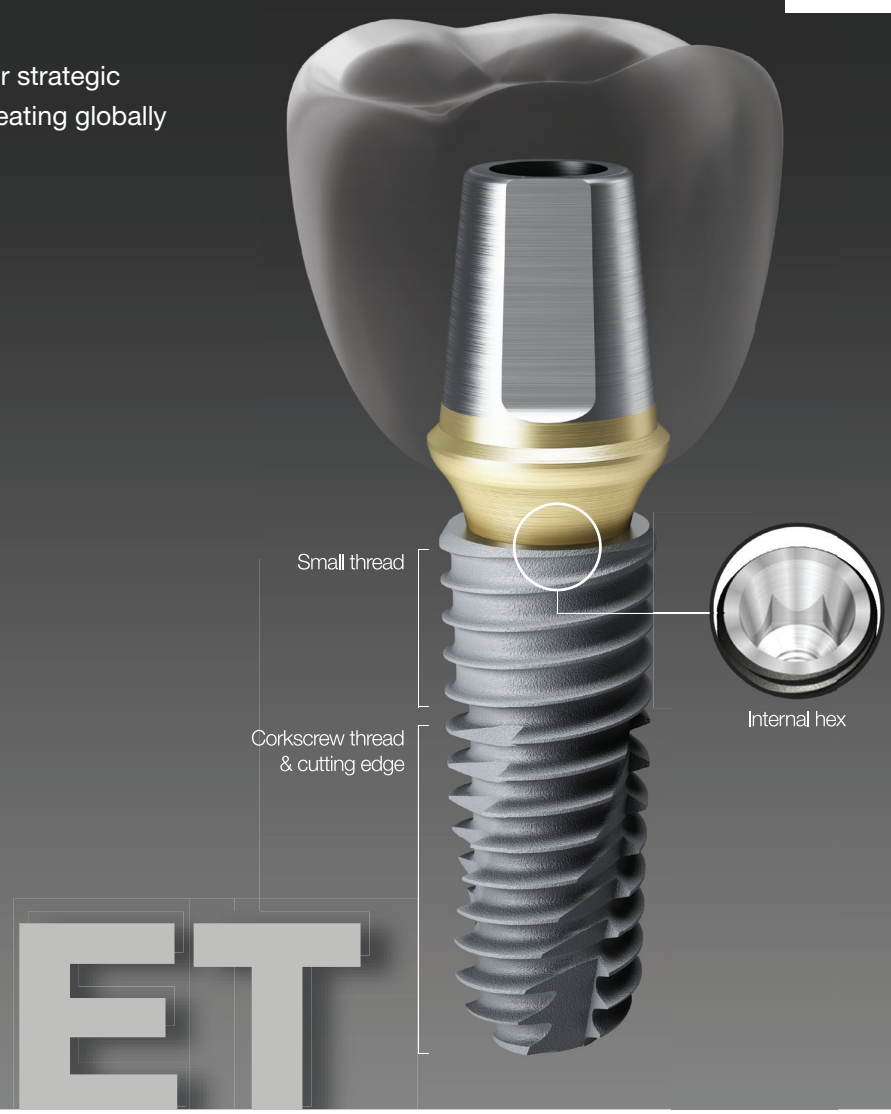

Submerged type implant with an Internal hex 11˚ taper connection structure

- Connection type and color - Mini / Regular
- Highest initial stability in soft bone by using upper-section small thread
- Corkscrew thread & cutting edge
  - Easy path adjustment through a superior self-threading effect
  - Acquires insertion torque with an increase in soft bone initial stability and without deviation according to the drill diameters
- The various body shape options are available according to the bone and patient's clinical condition
  - ETII (Straight Body) : Easily adjustable insertion depth
  - ETIII (1.5 Taper Body) : Strong initial stability
  - TSIV (6˚ Taper Body): Superior initial stability (recommended for soft bone and maxillary sinus)
- Applied Surface - SA / CA / BA / HA

HiOssen Surface features

HiOssen Implant,
provides world-class surface treatment technologies for fast and safe procedures

www.befrest.com

Provides optimum surface through acid treatment

- Provides Ra 2.5~3.0㎛ surface roughness
  However, upper section 0.5mm area is Ra 0.5~0.6㎛
- Achieved uniform micro-pit 1.3㎛ in size
- 46% greater surface area compared to RBM

SA Surface treatment performance (in-vitro and in-vivo)

- 20% improvement in osteoblast separation and ossification compared to RBM
- 48% improvement in initial stability (RT, 4 weeks) compared to RBM
- 20% improvement in ossification (BIC, 4 weeks) compared to RBM

Surface coated with low crystalline Nano-HA in SA

- Ultra-thin film with HA coating and 10nm or lower thickness
- HA coating on SA surface (Ra 2.5~3.0㎛)
- Dual function of titanium and HA
- HA is naturally removed during ossification process

BA Surface treatment performance (in-vitro and in-vivo)

- Fused surface having advantages of both SA and HA
- Maintains advantage of SA optimum surface formation
- Superior early ossification of the HA in soft bone condition
- 30% improvement in ossification (BIC) compared to SA

ET SYSTEM Contents

KIT Contents

www.befrest.com

KIT Contents (continued)

GBR Contents

www.befrest.com

ET SYSTEM

FIXTURE

COMPONENTS

ETIII SA Fixture

- Submerged type implant with 11° Morse taper internal hex connection
- Taper body with optimized screw thread design for superior initial stability
- World class SA surface treatment initializes osseointegration efficiently

Ultra-wide

- Ideal for posterior immediate placement after extraction or failed implant
- Optimized apex design for obtaining initial stability
- Recommended insertion torque : 40Ncm or less

※ For a single posterior implant case, using 4.5mm or bigger diameter is recommended.

NoMount fixture order code
: **C** + fixture product code (ex:**C**ET3R4010S)
Pre-Mounted fixture order code (fixture + mount + cover screw)
: **A** + fixture product code (ex : **A**ET3R4010S)

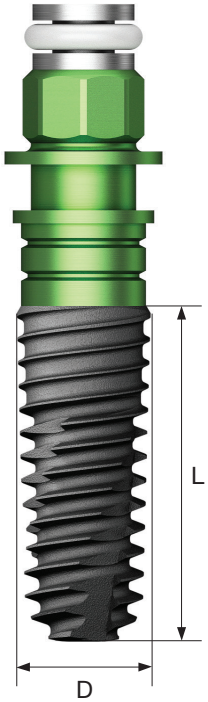

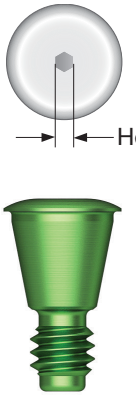

D ø3.5 Hex 2.1

M

L	8.5	10	11.5	13	15
	ET3M**3508S**	ET3M**3510S**	ET3M**3511S**	ET3M**3513S**	ET3M**3515S**

D ø4.0 Hex 2.5

R

L	7	8.5	10	11.5	13	15
	ET3R**4007S**	ET3R**4008S**	ET3R**4010S**	ET3R**4011S**	ET3R**4013S**	ET3R**4015S**

D ø4.5 Hex 2.5

R

L	7	8.5	10	11.5	13	15
	ET3R**4507S**	ET3R**4508S**	ET3R**4510S**	ET3R**4511S**	ET3R**4513S**	ET3R**4515S**

D ø5.0
Hex 2.5

R

L	6	7	8.5	10	11.5	13	15
	 Short						
	ET3R**5006S** Pre-Mount Only	ET3R**5007S**	ET3R**5008S**	ET3R**5010S**	ET3R**5011S**	ET3R**5013S**	ET3R**5015S**

Ultra-Wide

D ø6.0
Hex 2.5

R

L	6	7	8.5	10	11.5	13
	 Short					
	ET3R**6006S** Pre-Mount Only	ET3R**6007S**	ET3R**6008S**	ET3R**6010S**	ET3R**6011S**	ET3R**6013S**

D ø7.0
Hex 2.5

R

L	6	7	8.5	10	11.5	13
	 Short					
	ET3R**7006S** Pre-Mount Only	ET3R**7007S**	ET3R**7008S**	ET3R**7010S**	ET3R**7011S**	ET3R**7013S**

ETII SA Fixture

- Submerged type implant with 11° Morse taper internal hex connection
- World class SA surface treatment initializes osseointegration efficiently
- Straight body design for easy adjustment of insertion depth
- Unique thread design has enhanced initial stability in soft bone and powerful self threading capabilities
- Recommended insertion torque : 40Ncm or less

※ For a single posterior implant case, using 4.5mm or bigger diameter is recommended.

NoMount fixture order code
: **C** + fixture product code (ex:**C**ET2R4010S)
Pre-Mounted fixture order code (fixture + mount + cover screw)
: **A** + fixture product code (ex : **A**ET2R4010S)

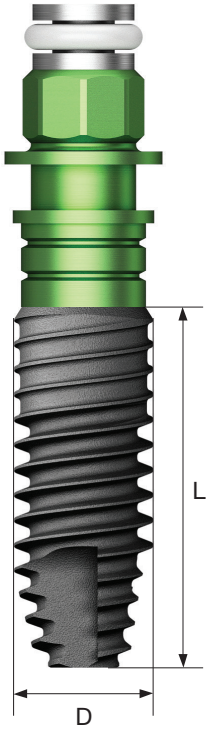

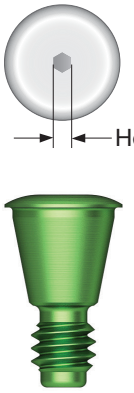

D ø3.5 Hex 2.1

M

L	8.5	10	11.5	13	15
	ET2M**3508S**	ET2M**3510S**	ET2M**3511S**	ET2M**3513S**	ET2M**3515S**

D ø4.0 Hex 2.5

R

L	7	8.5	10	11.5	13	15
	ET2R**4007S**	ET2R**4008S**	ET2R**4010S**	ET2R**4011S**	ET2R**4013S**	ET2R**4015S**

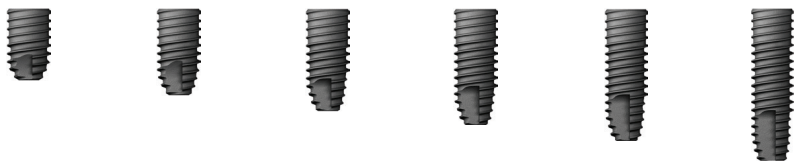

D ø4.5 Hex 2.5

R

L	7	8.5	10	11.5	13	15
	ET2R**4507S**	ET2R**4508S**	ET2R**4510S**	ET2R**4511S**	ET2R**4513S**	ET2R**4515S**

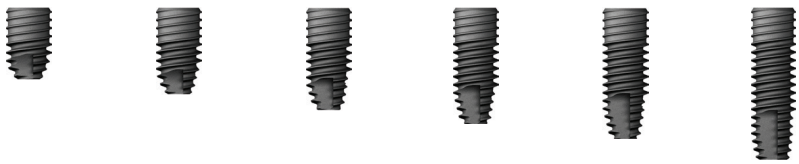

D ø5.0
Hex 2.5

R

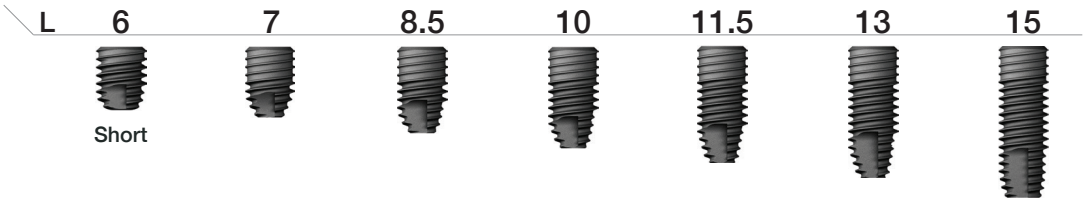

6	7	8.5	10	11.5	13	15
ET2R**5006S** Pre-Mount Only	ET2R**5007S**	ET2R**5008S**	ET2R**5010S**	ET2R**5011S**	ET2R**5013S**	ET2R**5015S**

ETIII BA Fixture

- Submerged type implant with 11° Morse taper internal hex connection
- Taper body with optimized screw thread design for superior initial stability
- SA surface coated with low crystalline Nano-HA
- Recommended insertion torque : 40Ncm or less

※ For a single posterior implant case, using 4.5mm or bigger diameter is recommended.

NoMount fixture order code
: **C** + fixture product code (ex:**C**ET3R4010B)
Pre-Mounted fixture order code (fixture + mount + cover screw)
: **A** + fixture product code (ex : **A**ET3R4010B)

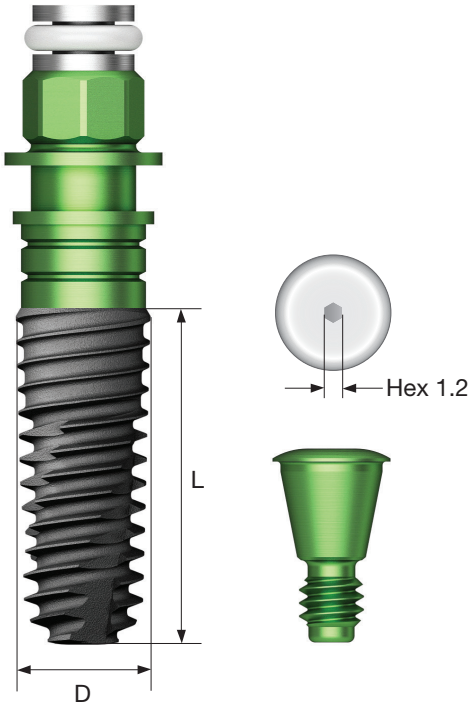

D ø3.5
Hex 2.1

M

L	8.5	10	11.5	13	15
	ET3M**3508B**	ET3M**3510B**	ET3M**3511B**	ET3M**3513B**	ET3M**3515B**

D ø4.0
Hex 2.5

R

L	7	8.5	10	11.5	13	15
	ET3R**4007B**	ET3R**4008B**	ET3R**4010B**	ET3R**4011B**	ET3R**4013B**	ET3R**4015B**

D ø4.5
Hex 2.5

R

L	7	8.5	10	11.5	13	15
	ET3R**4507B**	ET3R**4508B**	ET3R**4510B**	ET3R**4511B**	ET3R**4513B**	ET3R**4515B**

D ø5.0
Hex 2.5

R

L	7	8.5	10	11.5	13	15
						
	ET3R**5007B**	ET3R**5008B**	ET3R**5010B**	ET3R**5011B**	ET3R**5013B**	ET3R**5015B**

Screw

Cover Screw

- 1.2 Hex driver
- Recommended tightening torque : 5~8Ncm
- C = Connection

M Mini

R Regular

M

GSCS35

R

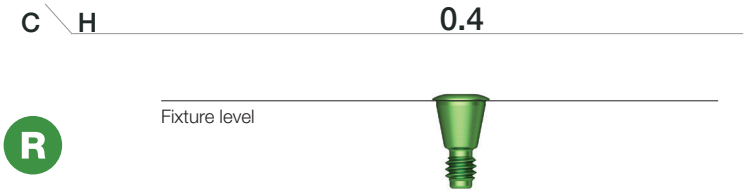

GSCS40S-B

Healing Abutment

- 1.2 Hex driver
- Tightening torque : 5~8Ncm

M Mini

R Regular

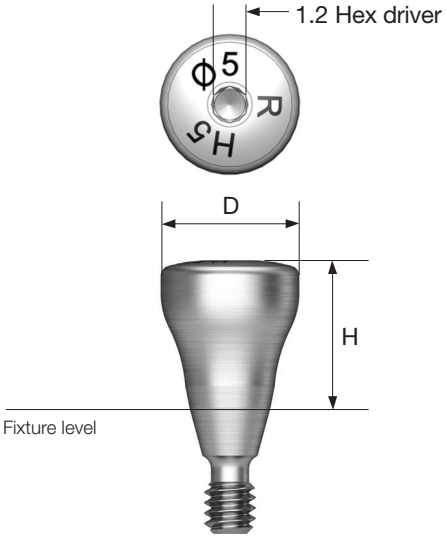

Selection table

Healing Abutment	**H**	3.0	4.0	5.0	7.0
Abutment	**G/H**	1.0	2.0 or 3.0	3.0 or 4.0	5.0
Impression coping	**Type**	Short	Short	Long	Long

D \ H	3.0	4.0	5.0	7.0
				
ø4.0	ETHLA**4003M**	ETHLA**4004M**	ETHLA**4005M**	ETHLA**4007M**
ø4.5	ETHLA**4503M**	ETHLA**4504M**	ETHLA**4505M**	ETHLA**4507M**

D \ H	3.0	4.0	5.0	7.0
				
ø4.0	ETHLA**4003R**	ETHLA**4004R**	ETHLA**4005R**	ETHLA**4007R**
ø4.5	ETHLA**4503R**	ETHLA**4504R**	ETHLA**4505R**	ETHLA**4507R**
ø5.0	ETHLA**5003R**	ETHLA**5004R**	ETHLA**5005R**	ETHLA**5007R**
ø6.0	ETHLA**6003R**	ETHLA**6004R**	ETHLA**6005R**	ETHLA**6007R**
ø7.0	ETHLA**7003R**	ETHLA**7004R**	ETHLA**7005R**	ETHLA**7007R**

Custom Healing Abutment

Available Soon

- Material : medical PEEK
- Customizable : Easy to adjust to achieve ideal emergence profile
- 2.1 Hex driver
- Recommended tightening torque : 5~8Ncm
- Packing unit : abutment + Ti screw
- C = Connection

M Mini

R Regular

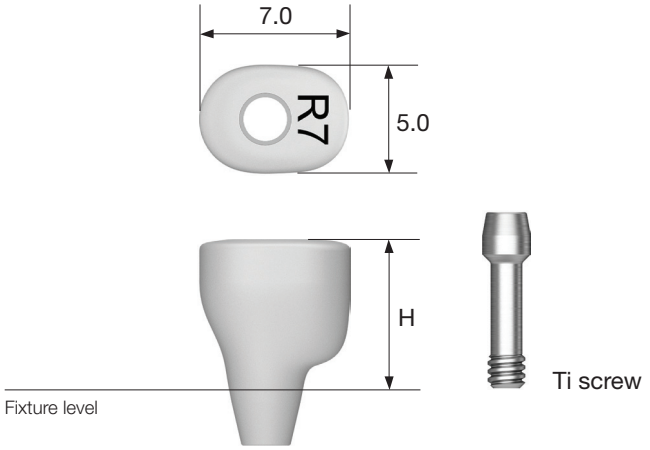

C \ H	5.0	7.0	9.0
M Ti screw : GSCHABSMT	 TSCHAP**M5**	 TSCHAP**M7**	 TSCHAP**M9**
R Ti screw : GSCHABSST	 TSCHAP**R5**	 TSCHAP**R7**	 TSCHAP**R9**

PROSTHETIC FLOW DIAGRAM 1

Transfer / Angled / FreeForm ST / GoldCast / NP-Cast

Fixture Level Impression

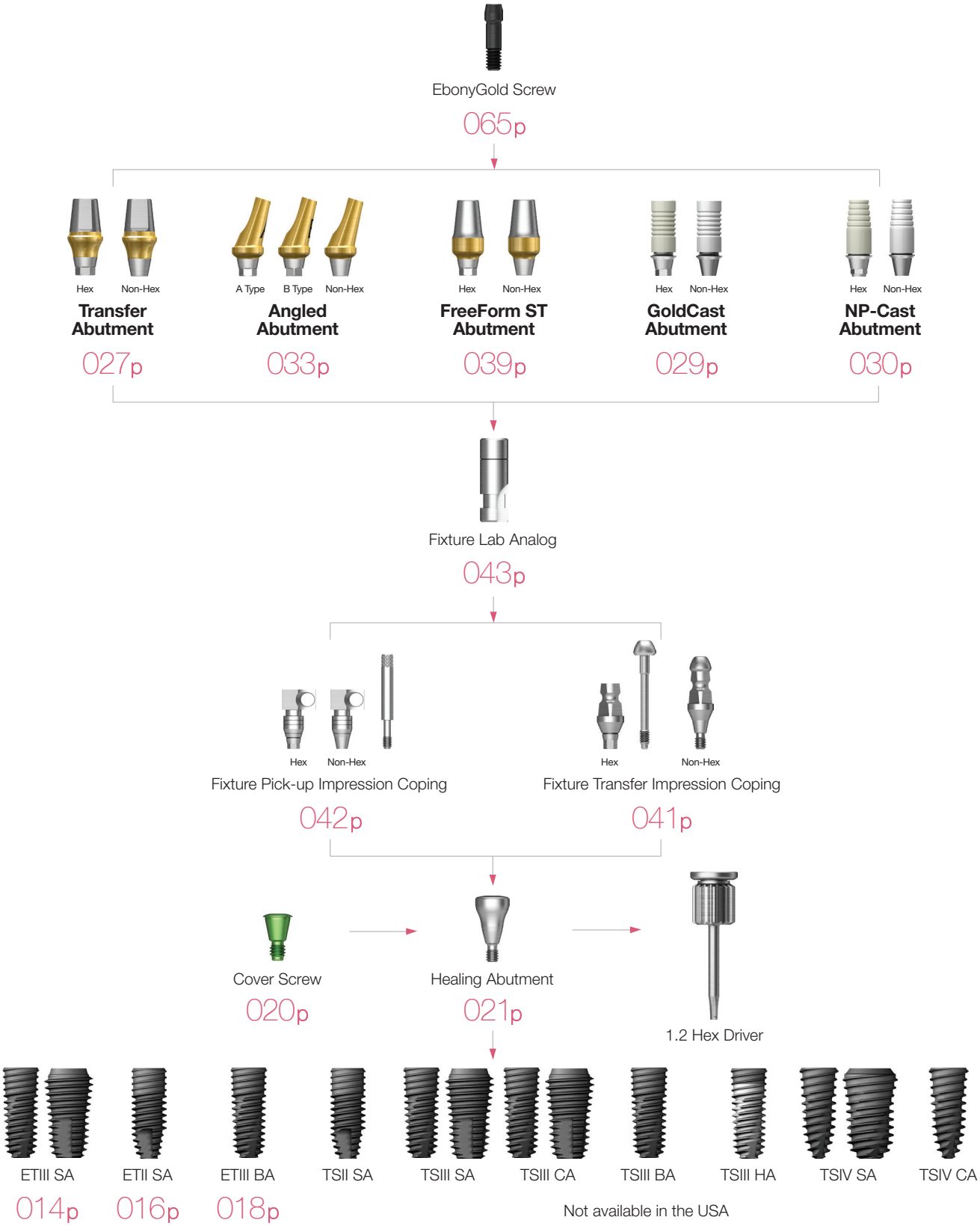

PROSTHETIC FLOW DIAGRAM 2

SmartFit / ZioCera / ZioCera Angled Temporary / Quick Temporary

Fixture Level Impression

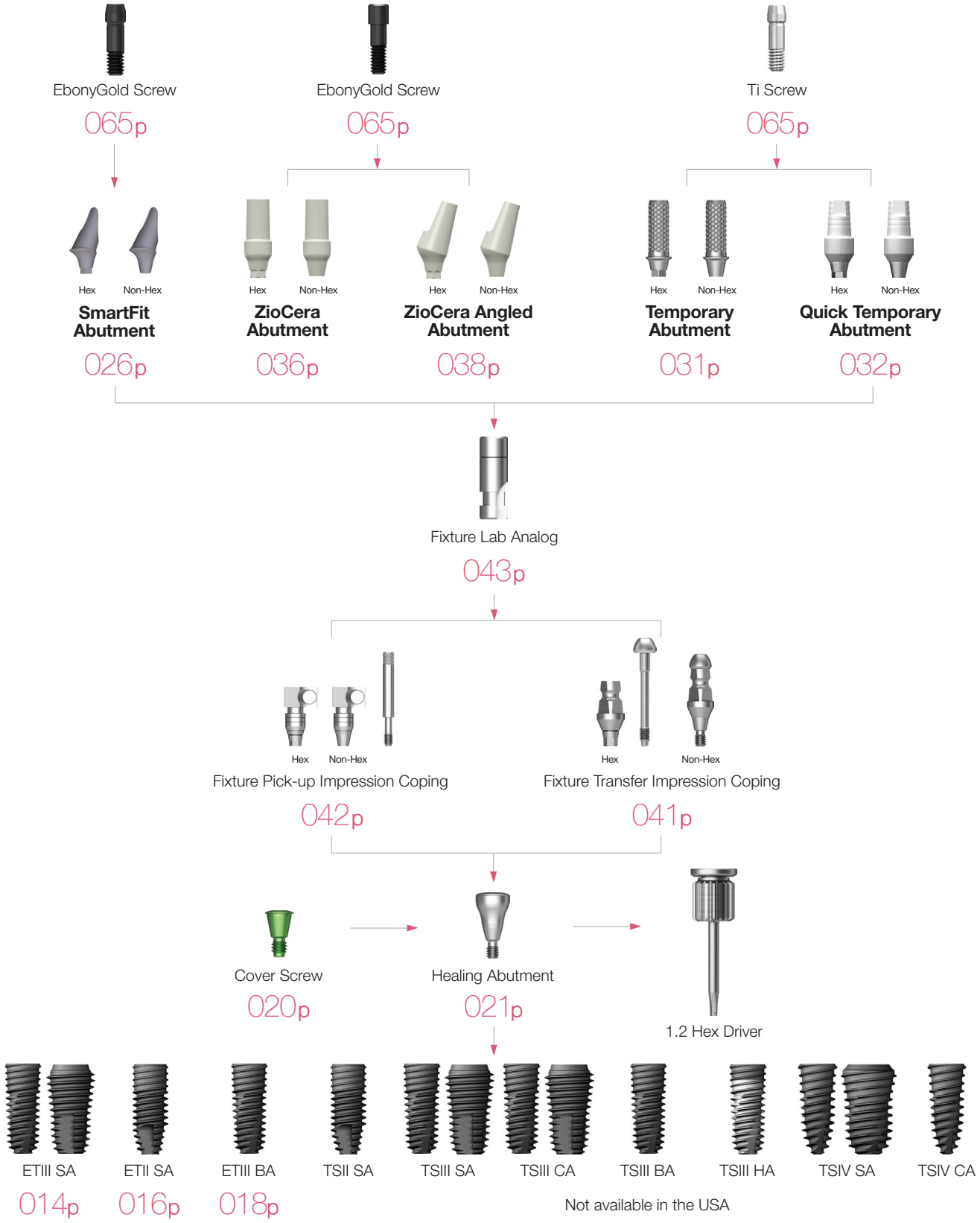

SmartFit Abutment

- CAD/CAM Custom Abutment
- 1.2 hex driver
- Recommended tightening torque : 20Ncm(mini), 30Ncm(regular)

- Recommended clinical case
  - Case where implant insertion area or angle is not ideal (max correction 30°)
  - Multiple cases requiring consistent path and stable guide
  - Anterior case where aesthetic design is required
  - Irregular or exceedingly deep gingiva case

How to Order

- Fill out an order sheet (*Contact your local rep for the order sheet)
- Send necessary items for each case to SmartFit Center
- Working time : 5~7days

Transfer Abutment

- Cement-retained prosthetic
- Gold colored gingiva region for improved aesthetics
- 1.2 hex driver
- Recommended tightening torque : 20Ncm(mini), 30Ncm(regular)
- Packing unit : abutment + EbonyGold screw

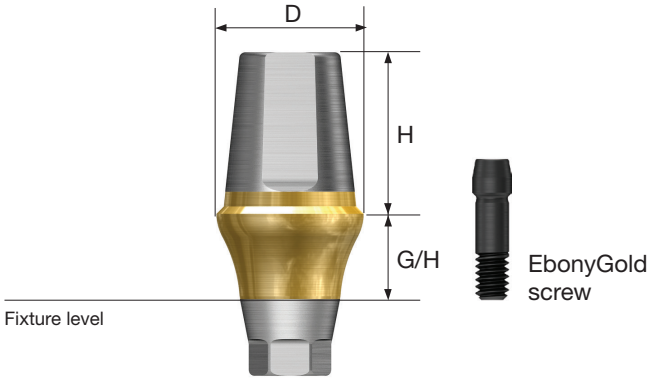

D ø4.5

M

EbonyGold screw
: HGATSM

	H \ G/H	1.0	2.0	3.0	4.0	5.0
Hex	5.5	HGTFA4515MHW	HGTFA4525MHW	HGTFA4535MHW	HGTFA4545MHW	HGTFA4555MHW
Non-Hex	5.5	HGTFA4515MNW	HGTFA4525MNW	HGTFA4535MNW	HGTFA4545MNW	HGTFA4555MNW

D ø5.0

M

EbonyGold screw
: HGATSM

	H \ G/H	1.0	2.0	3.0	4.0	5.0
Hex	5.5	HGTFA5015MHW	HGTFA5025MHW	HGTFA5035MHW	HGTFA5045MHW	-
Non-Hex	5.5	HGTFA5015MNW	HGTFA5025MNW	HGTFA5035MNW	HGTFA5045MNW	-

Transfer Abutment

D Ø4.5

R

EbonyGold screw
: HGATSS

	H \ G/H	1.0	2.0	3.0	4.0	5.0
Hex	5.5	HGTFA4515SHW	HGTFA4525SHW	HGTFA4535SHW	HGTFA4545SHW	HGTFA4555SHW
Non-Hex	5.5	HGTFA4515SNW	HGTFA4525SNW	HGTFA4535SNW	HGTFA4545SNW	HGTFA4555SNW

D Ø5.0

R

EbonyGold screw
: HGATSS

	H \ G/H	1.0	2.0	3.0	4.0	5.0
Hex	4.0	HGTFA5014SHW	HGTFA5024SHW	HGTFA5034SHW	HGTFA5044SHW	HGTFA5054SHW
	5.5	HGTFA5015SHW	HGTFA5025SHW	HGTFA5035SHW	HGTFA5045SHW	HGTFA5055SHW
	7.0	HGTFA5017SHW	HGTFA5027SHW	HGTFA5037SHW	HGTFA5047SHW	HGTFA5057SHW
Non-Hex	4.0	HGTFA5014SNW	HGTFA5024SNW	HGTFA5034SNW	HGTFA5044SNW	HGTFA5054SNW
	5.5	HGTFA5015SNW	HGTFA5025SNW	HGTFA5035SNW	HGTFA5045SNW	HGTFA5055SNW
	7.0	HGTFA5017SNW	HGTFA5027SNW	HGTFA5037SNW	HGTFA5047SNW	HGTFA5057SNW

D Ø6.0

R

EbonyGold screw
: HGATSS

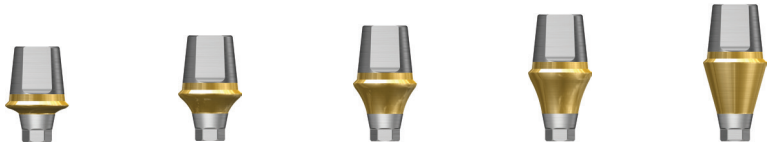

	H \ G/H	1.0	2.0	3.0	4.0	5.0
Hex	4.0	HGTFA6014SHW	HGTFA6024SHW	HGTFA6034SHW	HGTFA6044SHW	HGTFA6054SHW
	5.5	HGTFA6015SHW	HGTFA6025SHW	HGTFA6035SHW	HGTFA6045SHW	HGTFA6055SHW
	7.0	HGTFA6017SHW	HGTFA6027SHW	HGTFA6037SHW	HGTFA6047SHW	HGTFA6057SHW
Non-Hex	4.0	HGTFA6014SNW	HGTFA6024SNW	HGTFA6034SNW	HGTFA6044SNW	HGTFA6054SNW
	5.5	HGTFA6015SNW	HGTFA6025SNW	HGTFA6035SNW	HGTFA6045SNW	HGTFA6055SNW
	7.0	HGTFA6017SNW	HGTFA6027SNW	HGTFA6037SNW	HGTFA6047SNW	HGTFA6057SNW

GoldCast Abutment

- Screw-retained prosthetic
- Used for cases with path, aesthetic, and/or spatial constraints
- Prosthesis must be cast with dental grade gold alloy
- Melting Point : 1400℃~1450℃
  (cast of non-precious metal alloy is prohibited)
- 1.2 hex driver
- Recommended tightening torque : 20Ncm(mini), 30Ncm(regular)
- Packing unit : abutment + EbonyGold screw

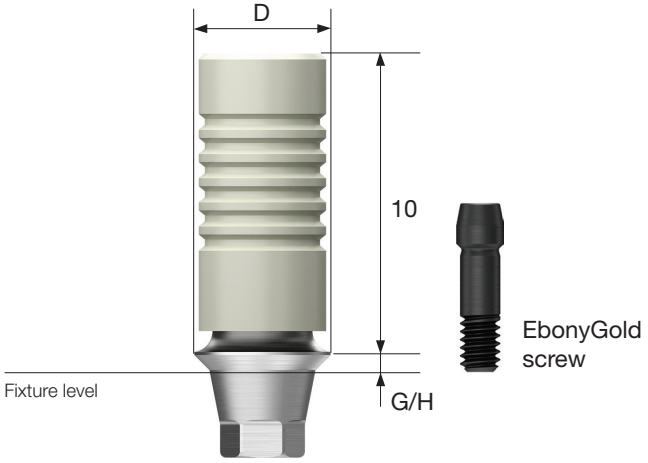

D ø4.0

M

EbonyGold screw
: HGATSM

G/H	1.0		3.0	
Type	Hex	Non-Hex	Hex	Non-Hex
				
	HGGCA**401MHW**	HGGCA**401MNW**	HGGCA**403MHW**	HGGCA**403MNW**

D ø4.5

R

EbonyGold screw
: HGATSS

G/H	1.0		3.0	
Type	Hex	Non-Hex	Hex	Non-Hex
				
	HGGCA**451SHW**	HGGCA**451SNW**	HGGCA**453SHW**	HGGCA**453SNW**

NP-Cast Abutment

- Screw-retained prosthetic
- Used for cases with path, aesthetic, and/or spatial constraints
- Prostheses must be cast with dental grade non-precious metal alloy
- Melting Point : 1400℃~1650℃
- 1.2 hex driver
- Recommended tightening torque : 20Ncm(mini), 30Ncm(regular)
- Packing unit : abutment + EbonyGold screw
- **Contains nickel**: Not recommended for patients with nickel allergy

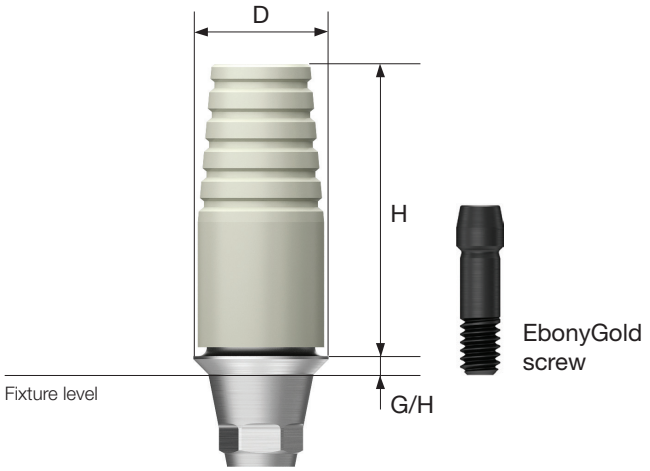

D ø4.0

M

EbonyGold screw
: HGATSM

G/H	1.0		3.0	
Type	Hex	Non-Hex	Hex	Non-Hex
				
	HGNCA**401MHW**	HGNCA**401MNW**	HGNCA**403MHW**	HGNCA**403MNW**

D ø4.5

R

EbonyGold screw
: HGATSS

G/H	1.0		3.0	
Type	Hex	Non-Hex	Hex	Non-Hex
				
	HGNCA**451SHW**	HGNCA**451SNW**	HGNCA**453SHW**	HGNCA**453SNW**

Temporary Abutment

- For temporary prostheses (Material: Ti Gr-3)
- Easily customizable
- 1.2 hex driver
- Recommended tightening torque : 20Ncm(mini/regular)
- Packing unit : abutment + Ti screw

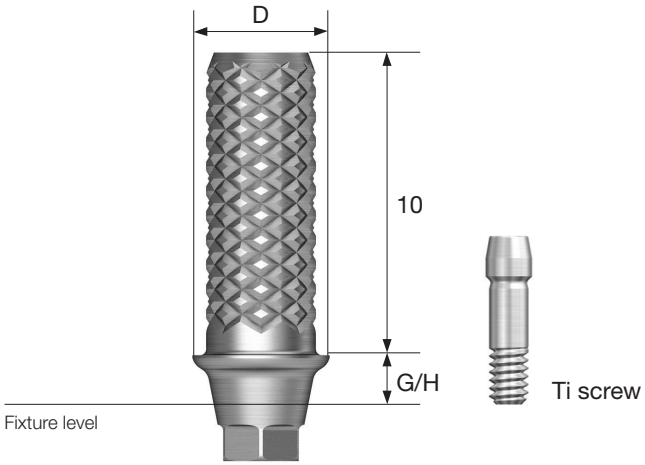

D ø4.0

M

Ti screw
: HGATSMT

G/H	1.0		3.0	
Type	Hex	Non-Hex	Hex	Non-Hex
				
	HGTPA**401MHT**	HGTPA**401MNT**	HGTPA**403MHT**	HGTPA**403MNT**

D ø4.5

R

Ti screw
: HGATSST

G/H	1.0		3.0	
Type	Hex	Non-Hex	Hex	Non-Hex
				
	HGTPA**451SHT**	HGTPA**451SNT**	HGTPA**453SHT**	HGTPA**453SNT**

Quick Temporary Abutment

- Material : Medical grade PEEK
- Used to fabricate a temporary prostheses for immediate loading
- Easy to modify
- Titanium base provides a stable connection to the fixture
- Use up to 180 days in the oral cavity
- Recommended tightening torque : 20Ncm(mini/regular)
- Packing unit : abutment + Ti screw

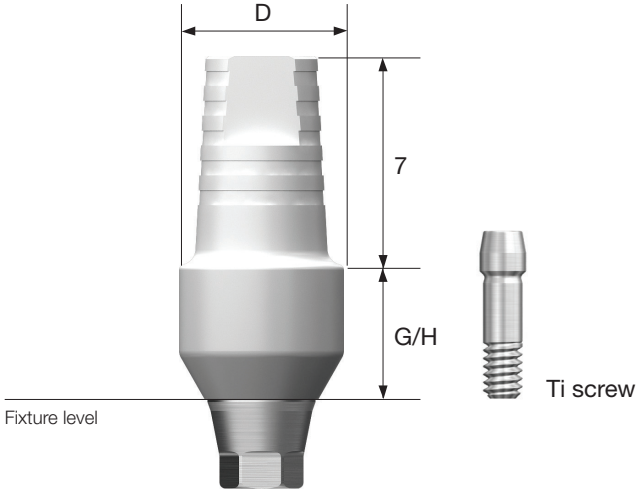

D ø4.5

M

Ti screw
: HGATSMT

G/H	5.0	
Type	Hex	Non-Hex
		
	HGQTA**455MHT**	HGQTA**455MNT**

D ø5.5

R

Ti screw
: HGATSST

G/H	5.0	
Type	Hex	Non-Hex
		
	HGQTA**555SHT**	HGQTA**555SNT**

Angled Abutment

- For path adjustment up to 17° axial angle
- Gold colored for aesthetics
- 12 orientation choices with two types of hexes, A and B
- Select appropriate hex type by using an Angled Abutment Selector
- 1.2 hex driver
- Recommended tightening torque : 20Ncm(mini), 30Ncm(regular)
- Packing unit : abutment + EbonyGold screw

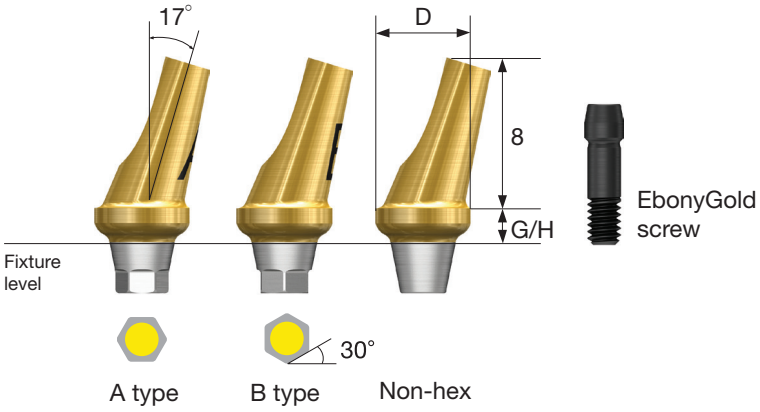

D Ø4.3

M

EbonyGold screw
: HGATSM

G/H	2.0			4.0		
Type	Hex A	Hex B	Non-Hex	Hex A	Hex B	Non-Hex
						
	HGAGA432MAW	HGAGA432MBW	HGAGA432MNW	HGAGA434MAW	HGAGA434MBW	HGAGA434MNW

D Ø4.5

R

EbonyGold screw
: HGATSS

G/H	2.0			4.0		
Type	Hex A	Hex B	Non-Hex	Hex A	Hex B	Non-Hex
						
	HGAGA452SAW	HGAGA452SBW	HGAGA452SNW	HGAGA454SAW	HGAGA454BW	HGAGA454SNW

Angled Abutment

D ø5.5

R

EbonyGold screw
: HGATSS

G/H	2.0			4.0		
Type	Hex A	Hex B	Non-Hex	Hex A	Hex B	Non-Hex
						
	HGAGA**552SAW**	HGAGA**552SBW**	HGAGA**552SNW**	HGAGA**554SAW**	HGAGA**554SBW**	HGAGA**554SNW**

Angled Abutment Components

Angled Abutment Selector

- Used for selecting Angled Abutment A or B type, diameter, and G/H when in oral cavity or in a working model

M Mini

R Regular

D	G/H	2.0		4.0	
	Type	Hex A	Hex B	Hex A	Hex B
Ø 4.3		 HGAAS432MA	 HGAAS432MB	 HGAAS434MA	 HGAAS434MB
Ø 4.5		 HGAAS452SA	 HGAAS452SB	 HGAAS454SA	 HGAAS454SB
Ø 5.5		 HGAAS552SA	 HGAAS552SB	 HGAAS554SA	 HGAAS554SB

ZioCera Abutment

- Zirconia material with superior biocompatibility
- Mimics color of natural tooth
- 1.2 hex driver
- Recommended tightening torque : 20Ncm(mini), 30Ncm(regular)
- Packing unit : abutment + EbonyGold screw

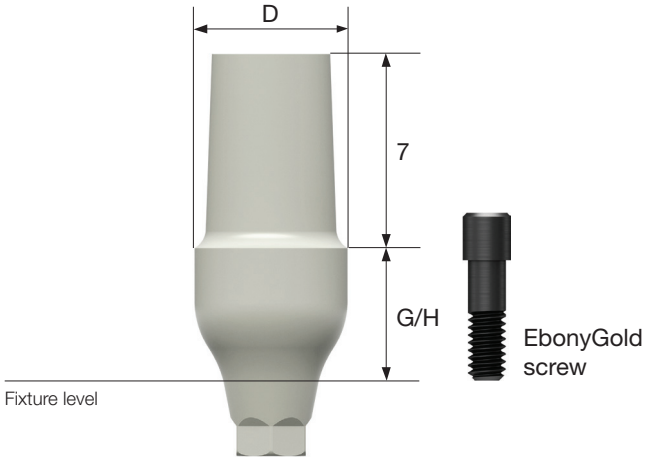

D ø4.5

M

EbonyGold screw
: HGABSM

G/H	3.5		5.0	
Type	Hex	Non-Hex	Hex	Non-Hex
				
	HGZCA453MHW	HGZCA453MNW	HGZCA455MHW	HGZCA455MNW

D ø4.5

R

EbonyGold screw
: HGABSS

G/H	3.5		5.0	
Type	Hex	Non-Hex	Hex	Non-Hex
				
	HGZCA453SHW	HGZCA453SNW	HGZCA455SHW	HGZCA455SNW

D ø5.5

R

EbonyGold screw
: HGABSS

G/H	3.5		5.0	
Type	Hex	Non-Hex	Hex	Non-Hex
				
	HGZCA**553SHW**	HGZCA**553SNW**	HGZCA**555SHW**	HGZCA**555SNW**

D ø6.5

R

EbonyGold screw
: HGABSS

G/H	3.5		5.0	
Type	Hex	Non-Hex	Hex	Non-Hex
				
	HGZCA**653SHW**	HGZCA**653SNW**	HGZCA**655SHW**	HGZCA**655SNW**

ZioCera Angled Abutment

- For path adjustment up to 17° axial angle
- Mimics color of natural tooth
- 1.2 hex driver
- Recommended tightening torque : 30Ncm(regular)
- Packing unit : abutment + EbonyGold screw

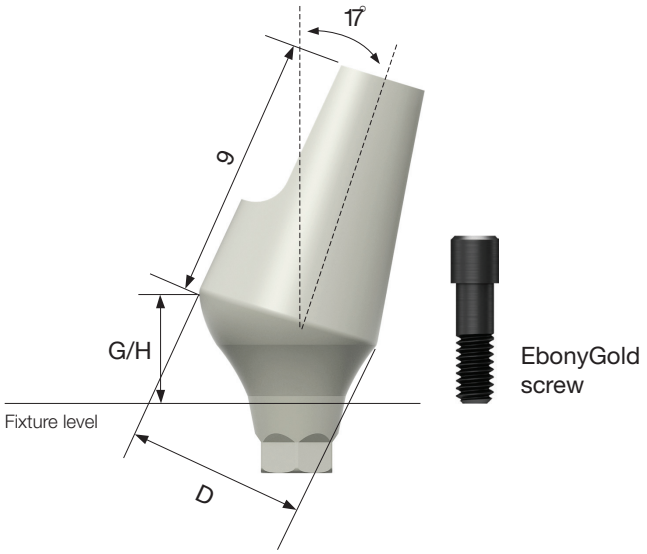

D ø5.5

R

EbonyGold screw
: HGABSS

G/H	3.0	
Type	Hex	Non-Hex
		
	HGZAA**553SHW**	HGZAA**553SNW**

D ø6.5

R

EbonyGold screw
: HGABSS

G/H	4.0	
Type	Hex	Non-Hex
		
	HGZAA**654SHW**	HGZAA**654SNW**

FreeForm ST Abutment

- Used to alter the path of an abutment or to customize the margin area
- Gold colored gingiva region for aesthetics
- Recommended tightening torque : 20Ncm(mini), 30Ncm(regular)
- Packing unit : abutment + EbonyGold screw

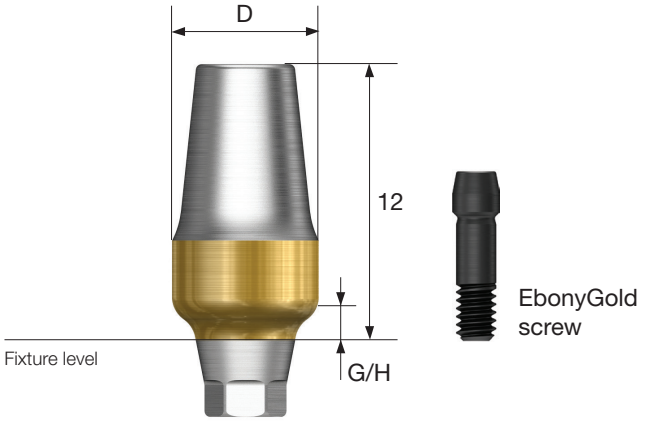

D Ø4.0

M

EbonyGold screw
: HGATSM

G/H	1.5		3.0	
Type	Hex	Non-Hex	Hex	Non-Hex
				
	HGFSA**401MHW**	HGFSA**401MNW**	HGFSA**403MHW**	HGFSA**403MNW**

D Ø4.0

R

EbonyGold screw
: HGATSS

G/H	1.5		3.0	
Type	Hex	Non-Hex	Hex	Non-Hex
				
	HGFSA**401SHW**	HGFSA**401SNW**	HGFSA**403SHW**	HGFSA**403SNW**

FreeForm ST Abutment

D ø5.5

R

EbonyGold screw
: HGATSS

G/H	1.5		3.0	
Type	Hex	Non-Hex	Hex	Non-Hex
				
	HGFSA**551SHW**	HGFSA**551SNW**	HGFSA**553SHW**	HGFSA**553SNW**

D ø7.0

R

EbonyGold screw
: HGATSS

G/H	1.5		3.0	
Type	Hex	Non-Hex	Hex	Non-Hex
				
	HGFSA**701SHW**	HGFSA**701SNW**	HGFSA**703SHW**	HGFSA**703SNW**

Impression Components

Fixture Transfer Impression Coping

- For closed tray impressions
- Accurate impression with gemstone-shaped structure (▽)
- 1.2 hex driver
- Packing unit : hex - impression coping + guide pin
  non-hex - impression coping(pre-assembled)

M Mini

R Regular

D \ L	11		14	
Type	Hex	Non-Hex	Hex	Non-Hex
				
Ø 4.0	HGFTI**4011MH**	HGFTI**4011MN**	HGFTI**4014MH**	HGFTI**4014MN**
Ø 4.0	HGFTI**4011SH**	HGFTI**4011SN**	HGFTI**4014SH**	HGFTI**4014SN**
Ø 5.0	HGFTI**5011SH**	HGFTI**5011SN**	HGFTI**5014SH**	HGFTI**5014SN**
Ø 6.0	HGFTI**6011SH**	HGFTI**6011SN**	HGFTI**6014SH**	HGFTI**6014SN**

Impression Components

Fixture Pick-up Impression Coping

- For open tray impressions
- Extend flag with a hole adds superior impression stability
- 1.2 hex driver
- Packing unit : Impression coping body + guide pin

M Mini
R Regular

D \ L	11		Guide Pin 0	Guide Pin 5.0
Type	Hex	Non-Hex		
				
Ø 4.0	HGFPI**4011MH**	HGFPI**4011MN**	HGFPG**00M**	HGFPG**05M***
Ø 4.0	HGFPI**4011SH**	HGFPI**4011SN**	HGFPG**00S**	HGFPG**05S***
Ø 5.0	HGFPI**5011SH**	HGFPI**5011SN**		
Ø 6.0	HGFPI**6011SH**	HGFPI**6011SN**		

D \ L	15		Guide Pin 0	Guide Pin 5.0
Type	Hex	Non-Hex		
				
Ø 4.0	HGFPI**4015MH**	HGFPI**4015MN**	HGFPG**00ML**	HGFPG**05ML***
Ø 4.0	HGFPI**4015SH**	HGFPI**4015SN**	HGFPG**00SL**	HGFPG**05SL***
Ø 5.0	HGFPI**5015SH**	HGFPI**5015SN**		
Ø 6.0	HGFPI**6015SH**	HGFPI**6015SN**		

Fixture Lab Analog

- Replicates fixture's position in a working model

M Mini

R Regular

M

HGFLAM

R

HGFLAS

PROSTHETIC FLOW DIAGRAM 3

Rigid / Transfer

Abutment Level Impression

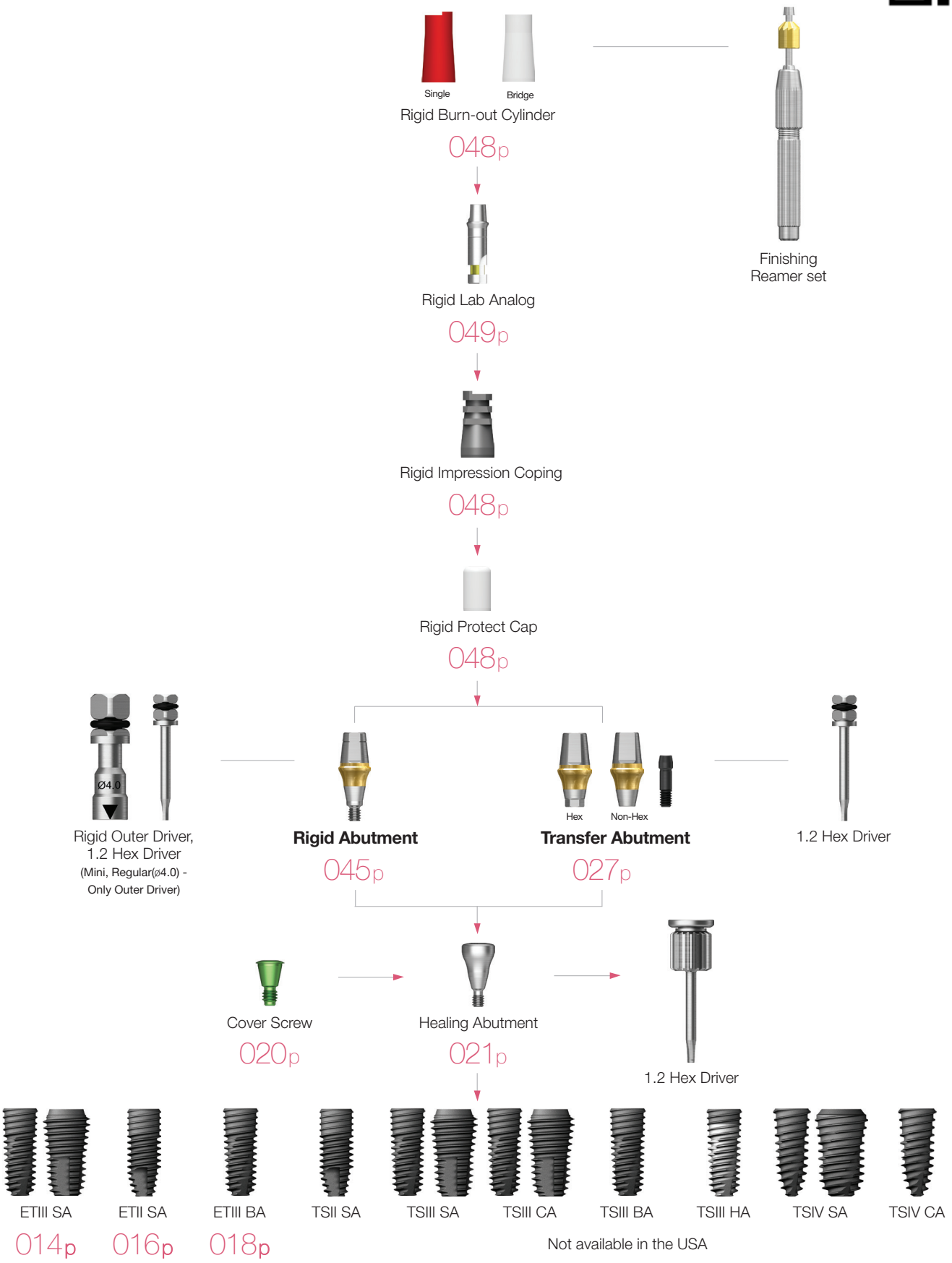

Rigid Abutment

www.befrest.com

- Cement-retained prosthetic
- Gold colored gingiva region for improved aesthetics
- Outer driver : ø4.0
- Outer driver or 1.2 hex driver : ø4.5, ø5.0, ø6.0
- 1.2 hex driver : ø7.0
- Recommended tightening torque : 30Ncm
- Packing unit : abutment + protect cap

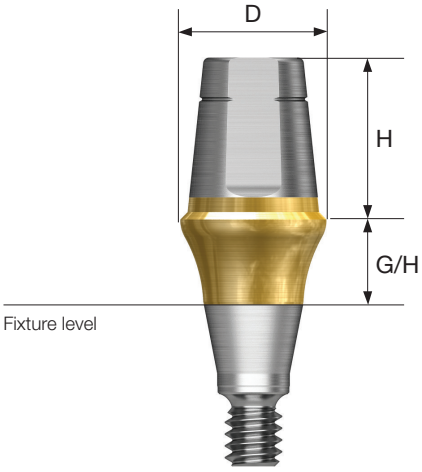

D ø4.0

M

H \ G/H	1.0	2.0	3.0	4.0
				
4.0	HGRGA**4014MP**	HGRGA**4024MP**	HGRGA**4034MP**	HGRGA**4044MP**
5.5	HGRGA**4015MP**	HGRGA**4025MP**	HGRGA**4035MP**	HGRGA**4045MP**
7.0	HGRGA**4017MP**	HGRGA**4027MP**	HGRGA**4037MP**	HGRGA**4047MP**

D ø4.5

M

H \ G/H	1.0	2.0	3.0	4.0
				
4.0	HGRGA**4514MP**	HGRGA**4524MP**	HGRGA**4534MP**	HGRGA**4544MP**
5.5	HGRGA**4515MP**	HGRGA**4525MP**	HGRGA**4535MP**	HGRGA**4545MP**
7.0	HGRGA**4517MP**	HGRGA**4527MP**	HGRGA**4537MP**	HGRGA**4547MP**

Rigid Abutment

D Ø4.0

R

H \ G/H	1.0	2.0	3.0	4.0
				
4.0	HGRGA4014SP	HGRGA4024SP	HGRGA4034SP	HGRGA4044SP
5.5	HGRGA4015SP	HGRGA4025SP	HGRGA4035SP	HGRGA4045SP
7.0	HGRGA4017SP	HGRGA4027SP	HGRGA4037SP	HGRGA4047SP

D Ø4.5

R

H \ G/H	1.0	2.0	3.0	4.0
				
4.0	HGRGA4514SP	HGRGA4524SP	HGRGA4534SP	HGRGA4534SP
5.5	HGRGA4515SP	HGRGA4525SP	HGRGA4535SP	HGRGA4535SP
7.0	HGRGA4517SP	HGRGA4527SP	HGRGA4537SP	HGRGA4537SP

D Ø5.0

R

H \ G/H	1.0	2.0	3.0	4.0	5.0
					
4.0	HGRGA5014SP	HGRGA5024SP	HGRGA5034SP	HGRGA5044SP	HGRGA5054SP
5.5	HGRGA5015SP	HGRGA5025SP	HGRGA5035SP	HGRGA5045SP	HGRGA5055SP
7.0	HGRGA5017SP	HGRGA5027SP	HGRGA5037SP	HGRGA5047SP	HGRGA5057SP

D Ø6.0

R

H \ G/H	1.0	2.0	3.0	4.0	5.0
					
4.0	HGRGA**6014SP**	HGRGA**6024SP**	HGRGA**6034SP**	HGRGA**6044SP**	HGRGA**6054SP**
5.5	HGRGA**6015SP**	HGRGA**6025SP**	HGRGA**6035SP**	HGRGA**6045SP**	HGRGA**6055SP**
7.0	HGRGA**6017SP**	HGRGA**6027SP**	HGRGA**6037SP**	HGRGA**6047SP**	HGRGA**6057SP**

D Ø7.0

R

H \ G/H	1.0	2.0	3.0	4.0	5.0
					
5.5	HGRGA**7015SP**	HGRGA**7025SP**	HGRGA**7035SP**	HGRGA**7045SP**	HGRGA**7055SP**

Rigid Abutment Components

Rigid Protect Cap

- Used to protect rigid abutments in the oral cavity and minimize foreign body sensation by the patient
- Can be used as a substructure for temporary prosthesis

M Mini
R Regular

D \ H	4.0	5.5	7.0
ø4.0/ø4.0	HGRPC4004	HGRPC4005	HGRPC4007
ø4.5/ø4.5	HGRPC4504	HGRPC4505	HGRPC4507
ø5.0	HGRPC5004S	HGRPC5005S	HGRPC5007S
ø6.0	HGRPC6004S	HGRPC6005S	HGRPC6007S
ø7.0	-	HGRPC7005S	-

Rigid Impression Coping

- Used in taking impressions of rigid abutments

M Mini
R Regular

D \ H	4.0	5.5	7.0
ø4.0/ø4.0	HGRIC4004S	HGRIC4005S	HGRIC4007S
ø4.5/ø4.5	HGRIC4504S	HGRIC4505S	HGRIC4507S
ø5.0	HGRIC5004SS	HGRIC5005SS	HGRIC5007SS
ø6.0	HGRIC6004SS	HGRIC6005SS	HGRIC6007SS
ø7.0	-	HGRIC7005SS	-

Rigid Burn-out Cylinder

- Used in attaching a rigid lab analog in framework for prosthetics
- After casting a prosthetic, margin area is adjusted using specialized reamer

M Mini
R Regular

D \ Type	Single	Bridge
ø4.0/ø4.0	HGRBC40S	HGRBC40B
ø4.5/ø4.5	HGRBC45S	HGRBC45B
ø5.0	HGRBC50SS	HGRBC50SB
ø6.0	HGRBC60SS	HGRBC60SB
ø7.0	HGRBC70SS	HGRBC70SB

Rigid Lab Analog

- Replicates shape of rigid abutment in a working model

M Mini

R Regular

D \ H	4.0	5.5	7.0
			
ø4.0/ø4.0	HGRLA4004	HGRLA4005	HGRLA4007
ø4.5/ø4.5	HGRLA4504	HGRLA4505	HGRLA4507
ø5.0	HGRLA5004S	HGRLA5005S	HGRLA5007S
ø6.0	HGRLA6004S	HGRLA6005S	HGRLA6007S
ø7.0	-	HGRLA7005S	-

PROSTHETIC FLOW DIAGRAM 4

Stud / Locator®

Overdenture

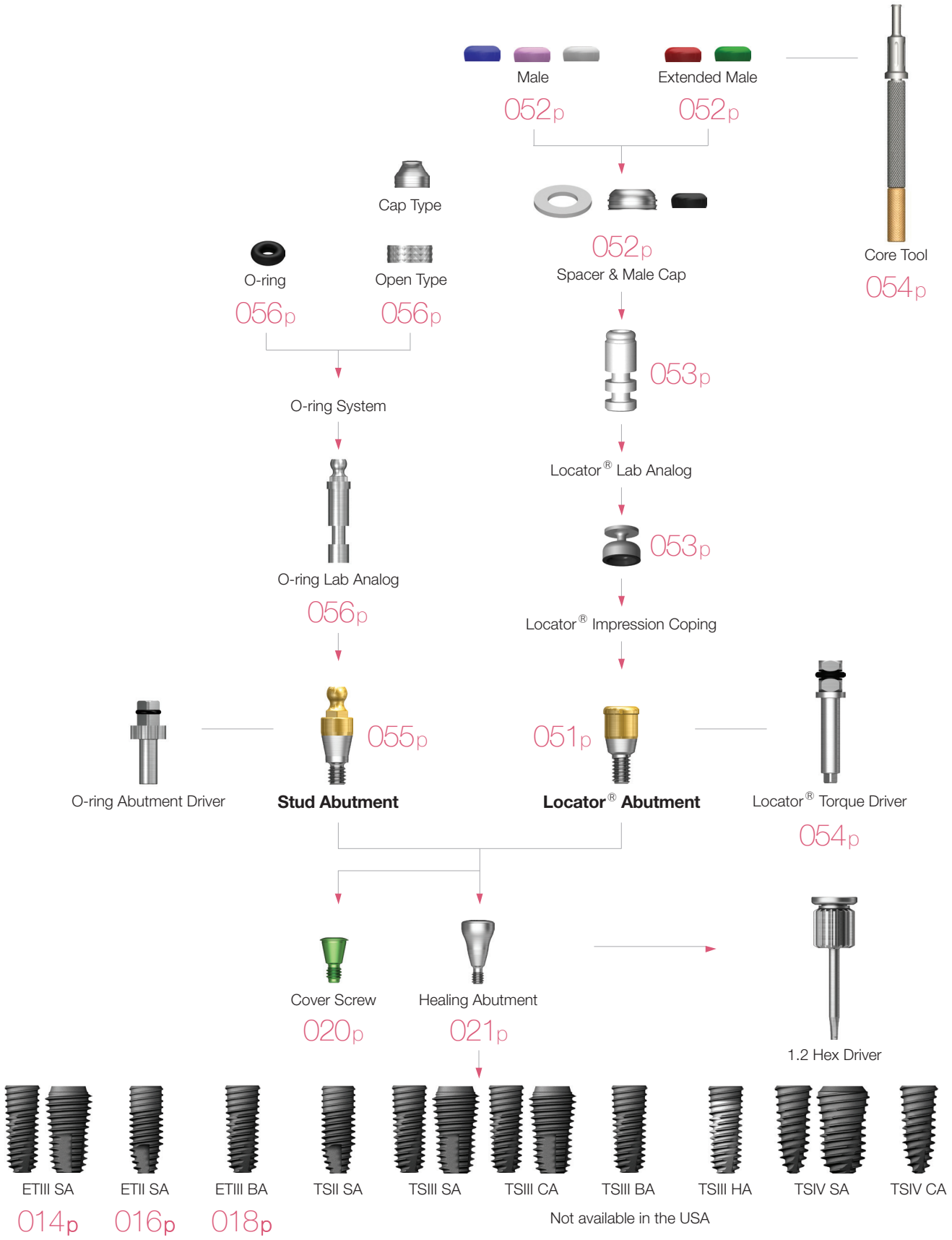

Locator® Abutment

- Low vertical dimension, stability, and various attachments with retention
- Accommodates up to 40º divergence between two implants
- Tighten by using a locator torque driver
- Recommended tightening torque : 30Ncm

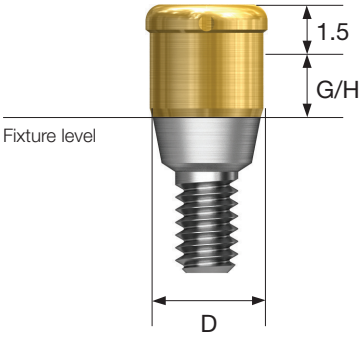

D Ø3.7

M

G/H	1.0	2.0	3.0	4.0	5.0
					
	HGLCA**3510M**	HGLCA**3520M**	HGLCA**3530M**	HGLCA**3540M**	HGLCA**3550M**

D Ø3.7

R

G/H	1.0	2.0	3.0	4.0	5.0
					
	HGLCA**4010S**	HGLCA**4020S**	HGLCA**4030S**	HGLCA**4040S**	HGLCA**4050S**

Locator® Abutment Components

Locator® Male Processing Kit

- Component
  - Block-out spacer / denture cap connected black processing male
  - Replacement male: blue/pink/clear
- Used after selecting retention males that are appropriate for the case
- Use Core tool to replace males
- Packing unit : 2 sets

LMPS

Locator® Replacement Male

- Retention: Approximately 6N
- Allows up to 20 degrees of divergence between implants
- Packing unit : blue replacement male (4 ea)

LRM06S

- Retention: Approximately 12N
- Allows up to 20 degrees of divergence between implants
- Packing unit : pink replacement male (4 ea)

LRM12S

- Retention: Approximately 22N
- Allows up to 20 degrees of divergence between implants
- Packing unit : clear replacement male (4 ea)

LRM22S

Locator® Extended Replacement Male

- Retention: Approximately 6N
- Allows up to 40 degrees of divergence between implants
- Packing unit : red extended replacement male (4 ea)

LEM06S

- Retention: Approximately 12N
- Allows up to 40 degrees of divergence between implants
- Packing unit : green extended replacement male (4 ea)

LEM12S

Locator® Black Processing Male

- Used in lab. process
- Packing unit : 4 ea

LBPS

Locator® Block Out Spacers

- Seals gap between denture cap and abutment
- Packing unit : 20 ea

LBSS

Locator® Impression Coping

Used to take impressions after attaching locator abutment
Packing unit : 4 ea

LICS

Locator® Lab Analog

- Replicates Locator Abutment in a working model
- Packing unit : 4 ea

LAL40S

Locator® Abutment Components

Locator® Core Tool

- Used in attaching and changing replacement males

LCCT

Locator® Torque Driver

- Used to tighten locator abutment

Type	Short	Long
		
	TWLD**SK**	TWLD**LK**

Stud Abutment

- Stud type overdenture prostheses
- Compensates the path up to 20˚
- O-ring abutment driver (AORD)
- Recommended tightening torque : 30Ncm

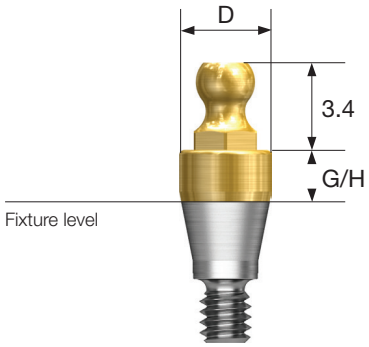

D Ø3.5

M

G/H	1.0	2.0	3.0	4.0	5.0	6.0
						
	HGSAO**351M**	HGSAO**352M**	HGSAO**353M**	HGSAO**354M**	HGSAO**355M**	HGSAO**356M**

D Ø3.5

R

G/H	1.0	2.0	3.0	4.0	5.0	6.0
						
	HGSAO**351S**	HGSAO**352S**	HGSAO**353S**	HGSAO**354S**	HGSAO**355S**	HGSAO**356S**

Stud Abutment Components

O-ring Retainer Cap Set

- Retaining system for stud type overdenture prostheses
- Packing unit : retainer cap + o-ring

OARCS

O-ring Retainer Set

- For low occlusal clearance
- Packing unit : retainer + o-ring

OARS

O-ring Set

Packing unit : 5 ea

OAON01S

O-ring Lab Analog

Replicates O-ring abutment in a working model

OAL

PROSTHETIC FLOW DIAGRAM 5

Multi / Multi Angled

Abutment Level Impression

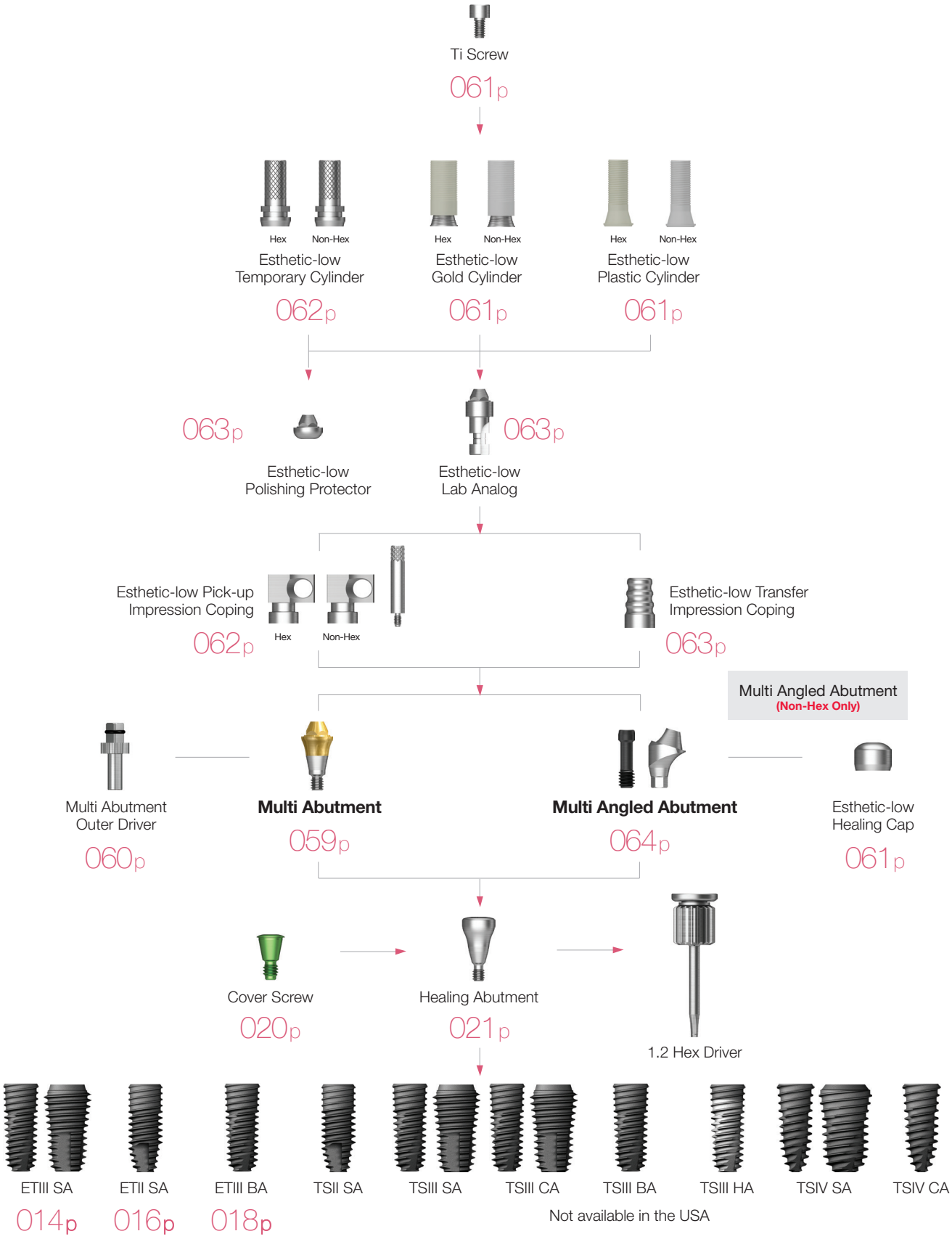

Multi Abutment

www.befrest.com

- Uses specialized outer driver (MAOD)
- Used in screw type prostheses for multiple cases
- Prostheses is fabriacted with US aesthetic-low cylinders
- Recommended tightening torque : 30Ncm

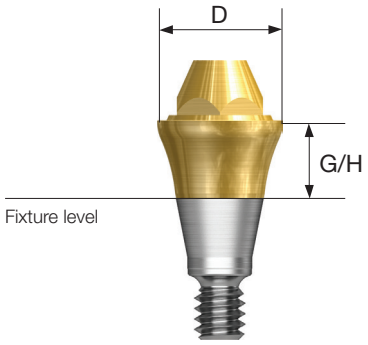

D Ø4.8

M

G/H	1.0	2.0	3.0	4.0	5.0
					
	ETMTA**501M**	ETMTA**502M**	ETMTA**503M**	ETMTA**504M**	ETMTA**505M**

D Ø4.8

R

G/H	1.0	2.0	3.0	4.0	5.0
					
	ETMTA**501R**	ETMTA**502R**	ETMTA**503R**	ETMTA**504R**	ETMTA**505R**

Multi Abutment Components

Multi Abutment Outer Driver

- Torque driver specialized for multi-abutments

MAOD

Multi Angled Abutment Screw

- 1.2 hex driver
- For Multi Angled abutments only

M Mini

R Regular

M

HGMATSM

R

HGMATSS

Multi Angled Abutment Carrier

- Provides aid in carrying and connecting multi angled abutment to the fixture.

HGMAC

Esthetic-low Healing Cap

- Used when protecting aesthetic-low abutment in the oral cavity and minimizing foreign body sensation by the patient
- 1.2 hex driver
- Recommended tightening torque : 20Ncm

R Regular

D \ H	6.0
Ø 4.8	MHCR100

Esthetic-low Gold Cylinder

- Cast with dental-grade gold alloy
- Melting Point : 1400℃ ~ 1450℃
  (cast using non-precious metal alloy is prohibited)
- 1.2 hex driver
- Recommended tightening torque : 20Ncm
- Packing unit : cylinder + Ti screw

R Regular

D \ Type	Non-Hex
Ø 4.8	MGR100

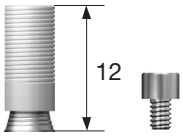

Ti screw
: MTS200 **(Ø 4.8)**

Esthetic-low Plastic Cylinder

- Cast with dental-grade alloy (gold, non-precious metals) after customization
- Connection area slightly different compared to gold cylinder
- 1.2 hex driver
- Recommended tightening torque : 20Ncm
- Packing unit : cylinder + Ti screw

R Regular

D \ Type	Non-Hex
Ø 4.8	MEPR100

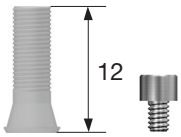

Ti screw
: MTS200 **(Ø 4.8)**

Multi Abutment Components

Esthetic-low Temporary Cylinder

- Temporary prostheses (Material: Ti Gr-3)
- 1.2 hex driver
- Recommended tightening torque : 20Ncm
- Packing unit : cylinder + Ti screw

R Regular

D	Type	Non-Hex
Ø 4.8	Ti screw : MTS200 (Ø 4.8)	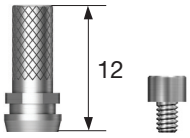 MTR200TH

Esthetic-low Pick-up Impression Coping

- Open tray impression
- Holed flag has superior impression stability
- Packing unit : impression coping body + guide pin

R Regular

D \ L	Non-Hex	Guide Pin 15
Ø 4.8	 MSR100	 GP150

Esthetic-low Transfer Impression Coping

D H 8.0

- Closed tray impression

R Regular

Ø 4.8

MTT**R100**

Esthetic-low Lab Analog

D

- Replicates abutment's position in a working model

R Regular

Ø 4.8

MER**R300**

Esthetic-low Polishing Protector

D

- Used to prevent damage to the connection area of cylinder when polishing.

R Regular

Ø 4.8

MPC**R100**

Multi Angled Abutment

www.befrest.com

- UScrewed retained prostheses
- Compensation path in multiple implant case
- Up to 60° path compensation (two implant standard)
- Prosthetic fabrication on US aesthetic-low cylinder(non-hex)
- Recommended tightening torque : 20Ncm(mini), 30Ncm(regular)
- Packing unit : multi angled abutment + EbonyGold screw

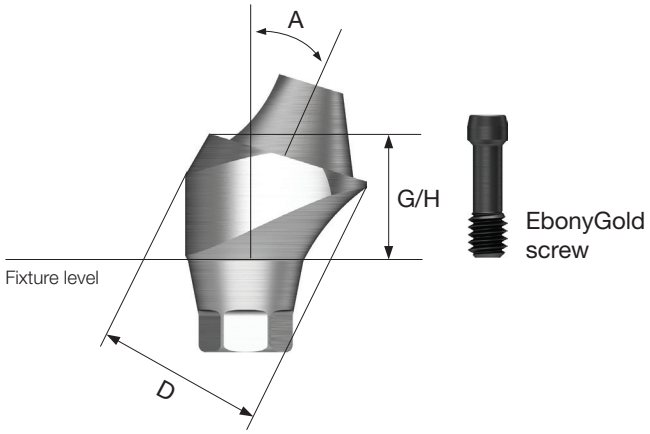

D ø4.8

M

EbonyGold screw
: GSMABSM

Angle \ G/H	2.5	3.0	4.0
17°	 HGMAA217MHW	 HGMAA317MHW	 HGMAA417MHW

Angle \ G/H	3.5	4.0	5.0
30°	 HGMAA330MHW	 HGMAA430MHW	 HGMAA530MHW

D ø4.8

R

EbonyGold screw
: GSMABSS

Angle \ G/H	2.5	3.0	4.0
17°	 HGMAA217SHW	 HGMAA317SHW	 HGMAA417SHW

Angle \ G/H	3.5	4.0	5.0
30°	 HGMAA330SHW	 HGMAA430SHW	 HGMAA530SHW

Abutment Screw

EbonyGold Abutment Screw

- TypeA - Transfer Abutment
  Angled Abutment
  FreeForm ST Abutment
  GoldCast Abutment
  Type B - ZioCera Abutment

M Mini

R Regular

	Type A	Type B
M	 HGATSM	 HGABSM
R	 HGATSS	 HGABSS

Titanium Abutment Screw

- Applicable abutments
  - Temporary abutment

M Mini

R Regular

M	 HGATSMT	 HGABSMT
R	 HGATSST	 HGABSST

Lab Screw

Laboratory Screw

- Lab Screw : Use for laboratory work instead of abutment screw.
- Waxing Screw : Use for making a screw hole in a transfer jig or wax-up part.
- Applicable abutments
  - Transfer abutment
  - Angled abutment
  - FreeForm ST abutment
  - GoldCast abutment

M Mini

R Regular

	Lab Screw	Waxing Screw
M	 HGATS**ML**	 HGATS**MW**
R	 HGATS**SL**	 HGATS**SW**

www.befrest.com

Hiossen KITS

Taper KIT (HTAPEK)

Available for use ETIII SSIII USIII

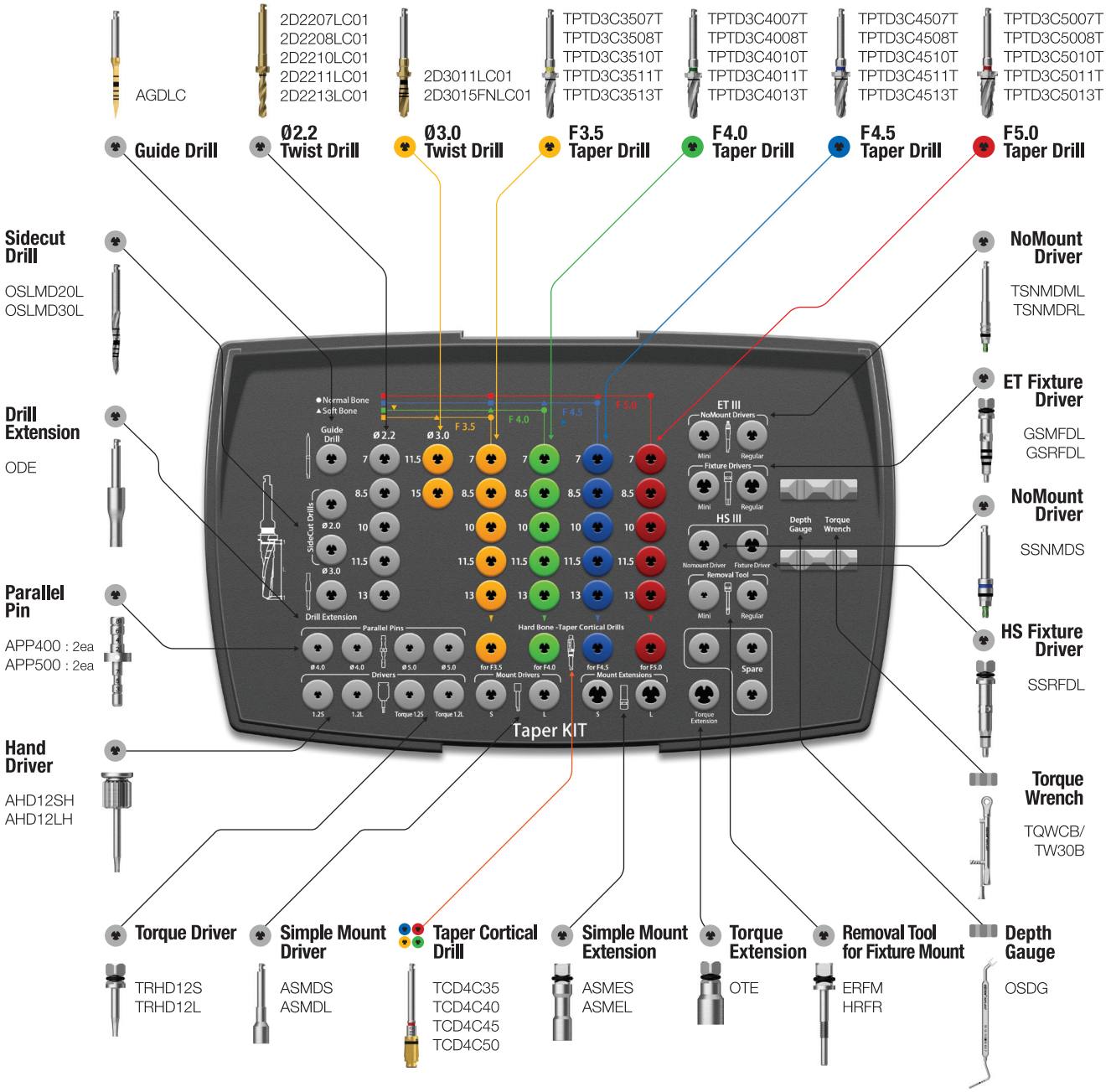

Standard KIT (HSTDDK)

Available for use | ETII / III TSII / III | SSII / III | USII / III

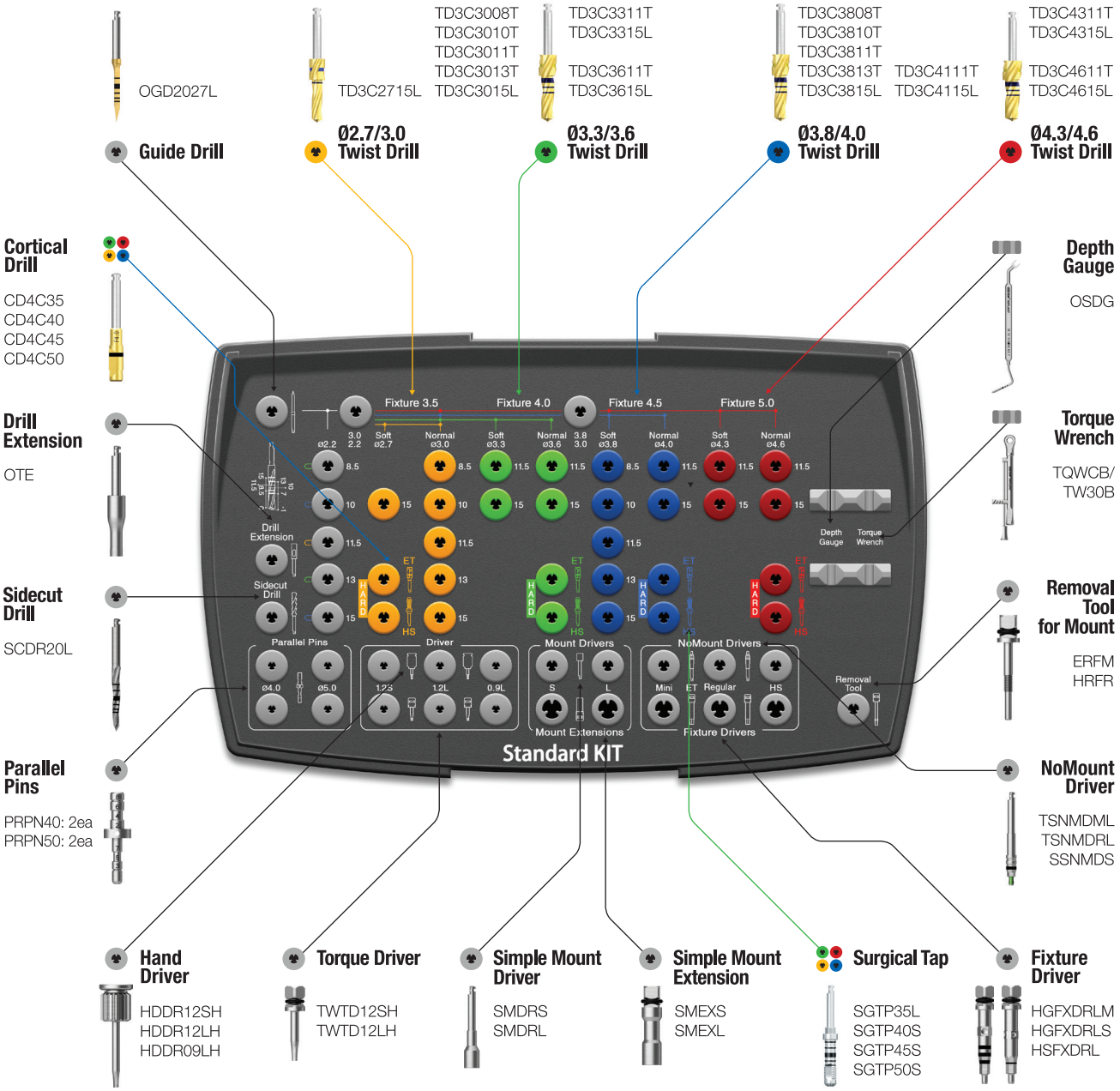

Taper Mini KIT (HTAPEMK)

Available for use: ETII / III TSII / III | SSII / III | USII / III | Ultra-wide

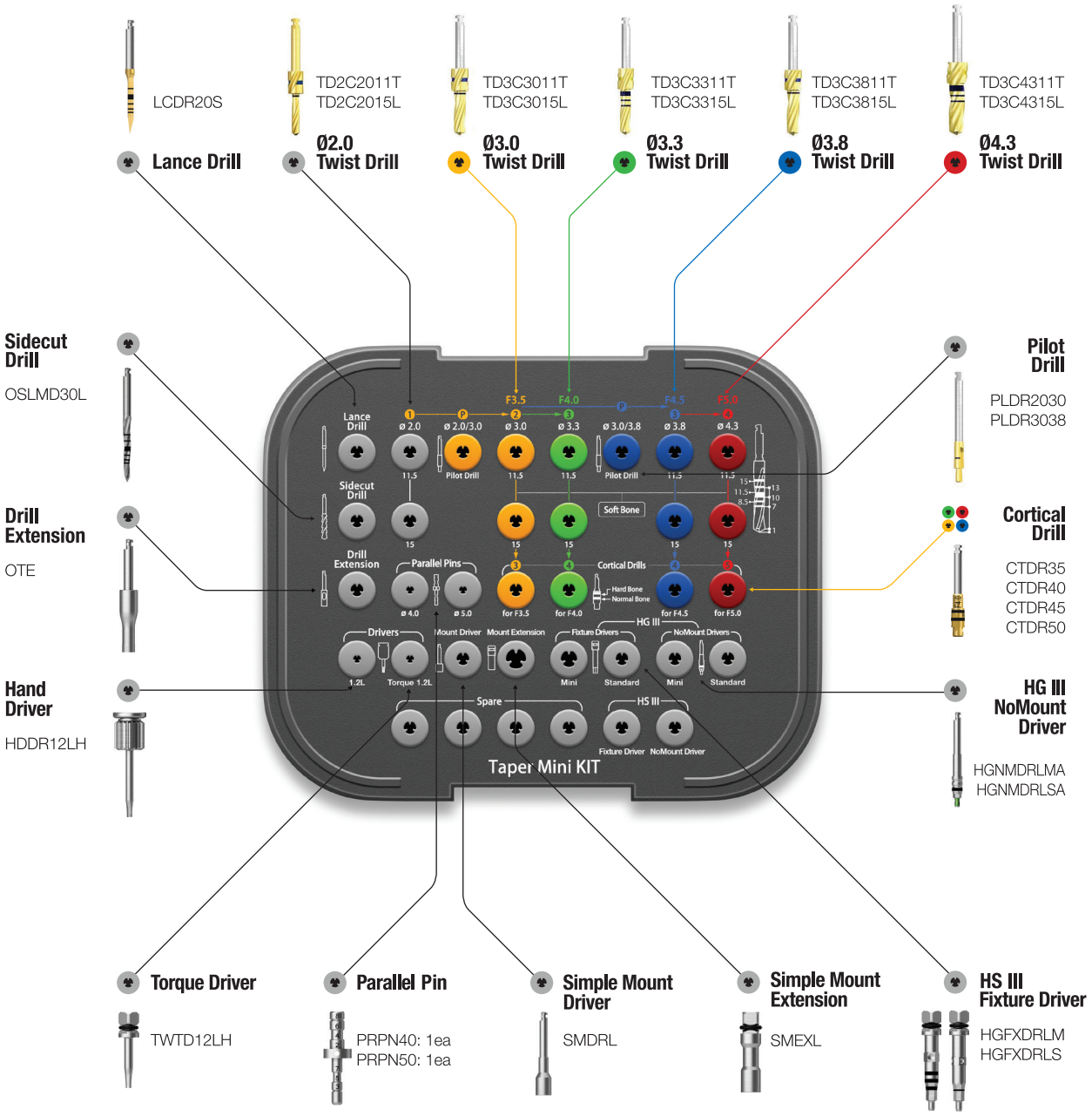

Taper Ultra KIT (HULTPK)

Available for use Ultra-wide

Base components

Open Wrench
ASOW

Ratchet Wrench
CITQW-1185A

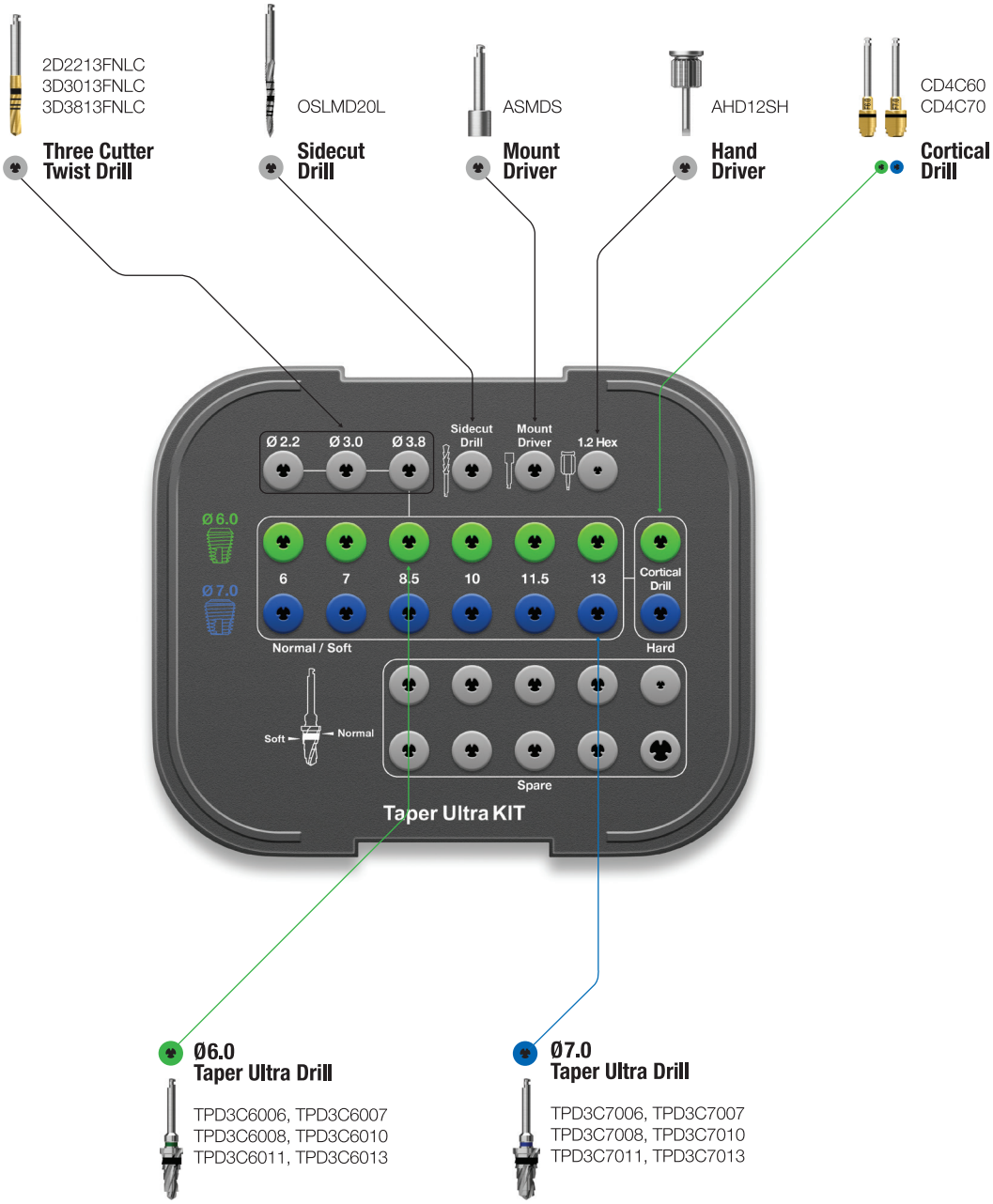

Ultra KIT (HULTRK)

Available for use **Ultra-wide**

Base components

Open Wrench
ASOW

Ratchet Wrench
CITQW-1185A

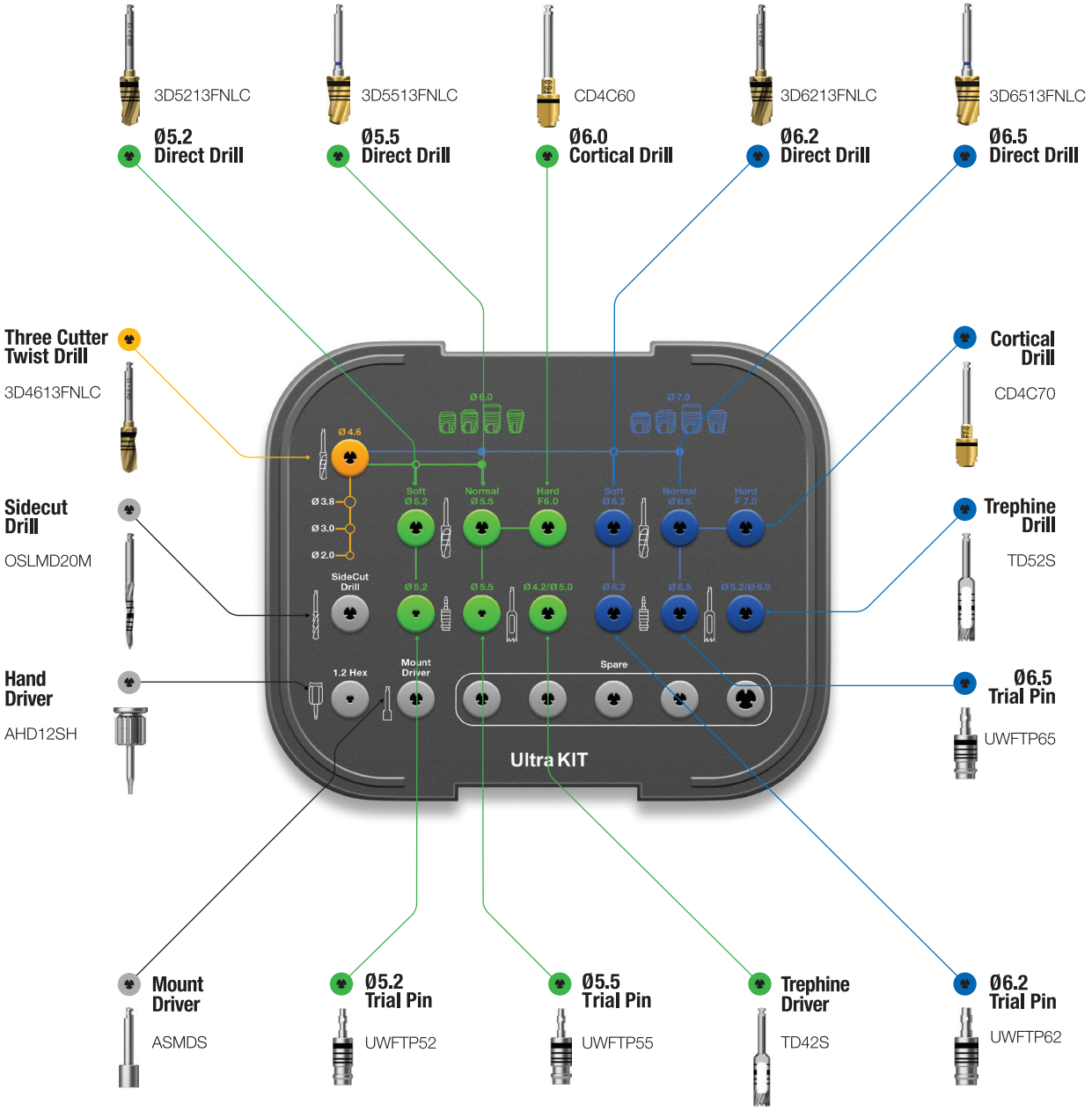

123 KIT (O123K)

Available for use | ETII / III TSII / III | SSII / III | USII / III

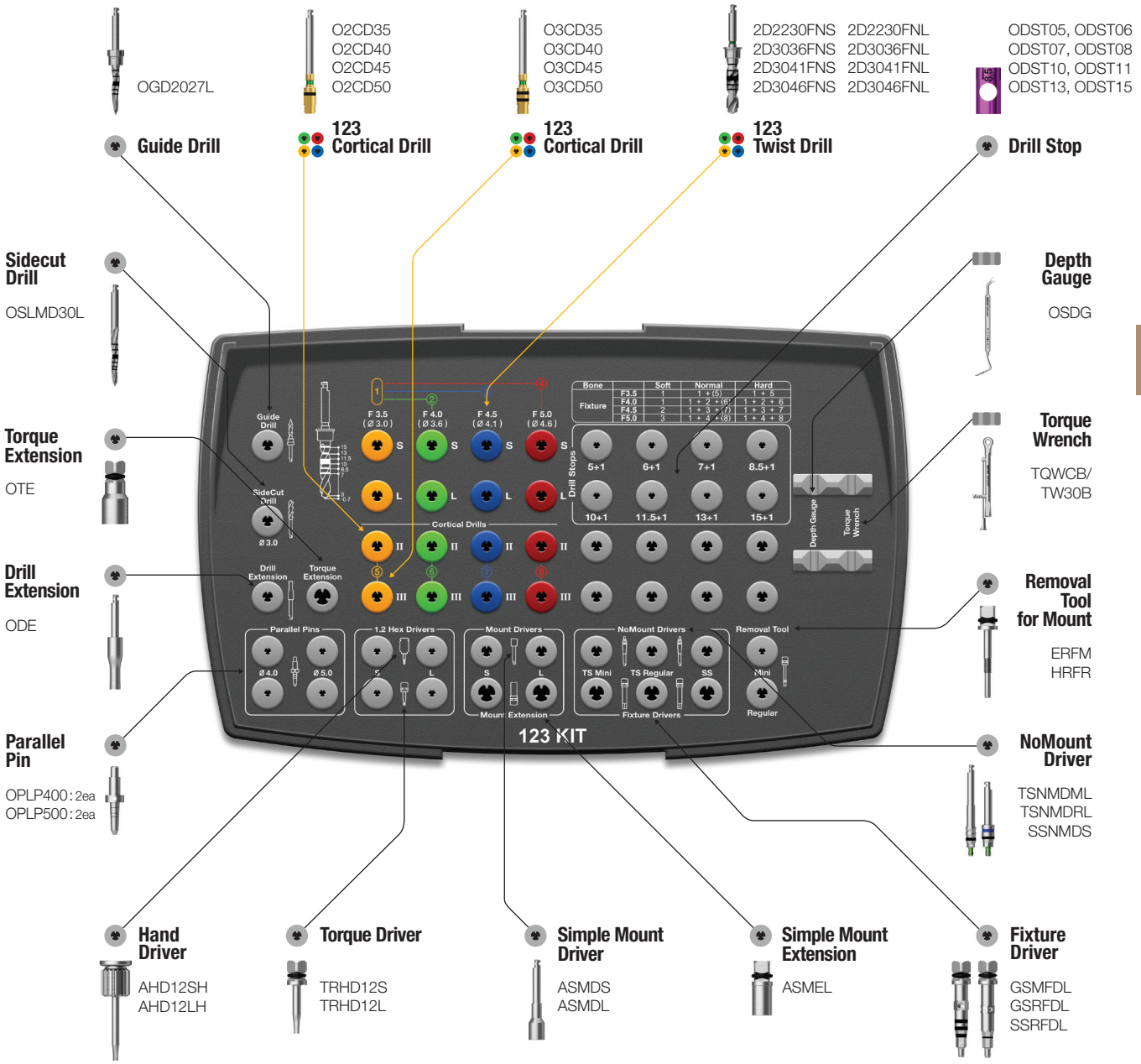

Surgical Instruments

Lance Drill - Guide Drill

Mark the initial osteotomy position

- Bone density can be judged through drilling

L	Short	Long
	AGDSC	AGDLC

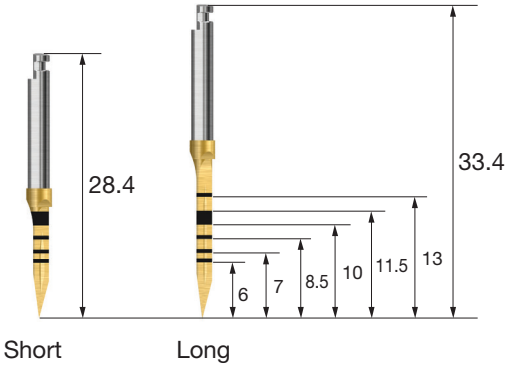

123 Guide Drill

- Drill that forms a hole in the bone to make initial drilling easy
- Easy depth control with stoppers

D	Ø2.0
	OGD2027L

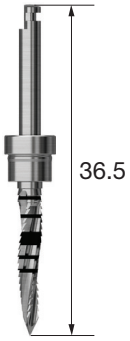

Sidecut Drill

- Correct the angle or position of the osteotomy cutting edge

L \ D1 / D2	Ø1.5 / 2.0	Ø2.0 / 2.5	Ø3.0 / 3.5
13	OSLM**DS**		-
16.5	-	-	OSLMD**30L**
20	OSLM**DL**	OSLMD**20L**	-

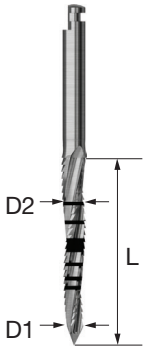

Drill Extension

- Tool used to extend the length of drills and other miscellaneous hand piece tools
- It may bend or break if excessive force is applied
- Drill length is extended by 16.9mm with drill extension

ODE

Twist Drill - Stopper Drill

- Long stopper(6mm)
  - Built-in stopper
  - Procedure possible without drill extension when performing posterior procedures
- Color coded stopper indicates the drill length

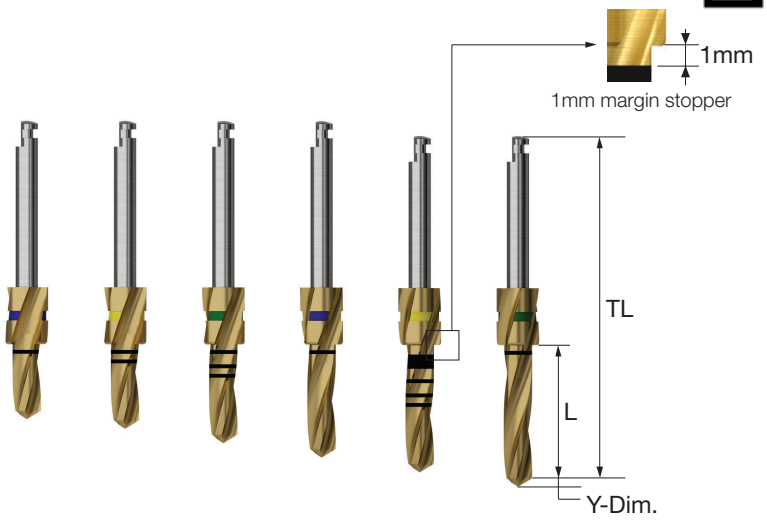

L	TL	D	Ø2.2	Ø3.0	Ø3.3	Ø3.6	Ø3.8	Ø4.1	Ø4.3	Ø4.6
6.0	30.5		2D2206LC	3D3006LC	-	-	3D3806LC	-	-	-
7.0	31.5		2D2207LC	3D3007LC01	-	-	3D3807LC01	-	-	-
8.5	33		2D2208LC	3D3008LC01	-	-	3D3808LC01	-	-	-
10.0	34.5		2D2210LC	3D3010LC01	-	-	3D3810LC01	-	-	-
11.5	34.5		2D2211LC	3D3011LC01	3D3311LC01	3D3611LC01	3D3811LC01	3D4111LC01	3D4311LC01	3D4611LC01
13.0	36		2D2213LC	3D3013LC01	-	-	3D3813LC01	-	-	-
Y-Dim.			0.6	0.9	1.0	1.0	1.0	1.0	1.0	1.0

Twist Drill - Non Stopper Drill

- A drill that can be used when stopper drill's accessibility in the oral cavity is limited
- Marking drill with short and long specifications
- Refer to the image for marking measurements

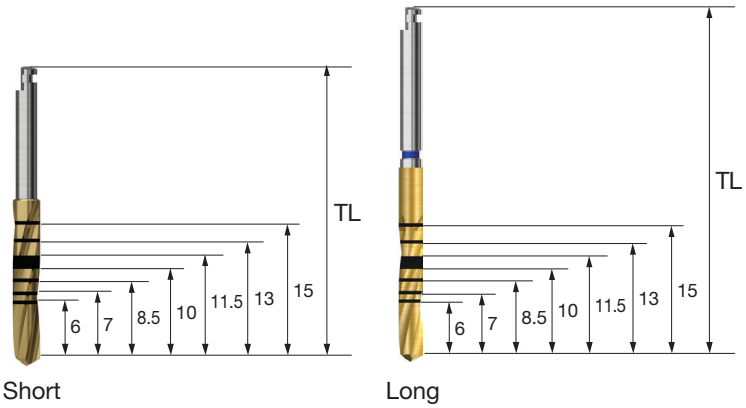

TL	D	Ø1.5	Ø2.0	Ø2.2	Ø2.7	Ø3.0	Ø3.3
33		2D1518FNLC	2D2018FNLC	2D2218FNLC	3D2718FNLC	3D3018FNLC	3D3318FNLC
41		-	-	2D2215FNLC	3D2715FNLC01	3D3015FNLC01	3D3315FNLC01

TL	D	Ø3.6	Ø3.8	Ø4.1	Ø4.3	Ø4.6
33		3D3618FNLC	3D3818FNLC	3D4118FNLC	3D4318FNLC	3D4618FNLC
41		3D3615FNLC01	3D3815FNLC01	3D4115FNLC01	3D4315FNLC01	3D4615FNLC01

Surgical Instruments

123 Twist Drill

- Color coded with corresponding fixture sizes
- Easy depth control with drill stopper
- Designed to be used with drill stopper
- F = Fixture

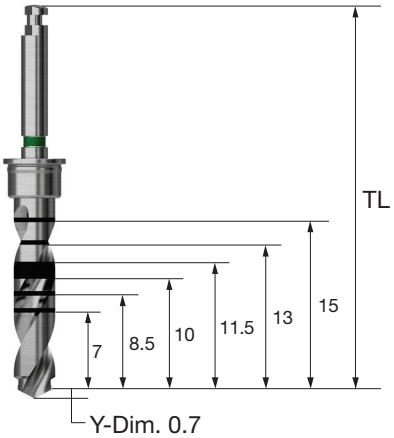

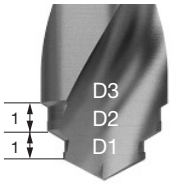

123 drill diameter

TL \ D1 / D2 / D3	F3.5(Ø2.2 / 3.0)	F4.0(Ø3.0 / 3.6)	F4.5(Ø3.0 / 3.6 / 4.1)	F5.0(Ø3.0 / 4.1 / 4.6)
34	2D2230FNS	2D3036FNS	2D3041FNS	2D3046FNS
40.4	2D2230FNL	2D3036FNL	2D3041FNL	2D3046FNL
Color	Yellow	Green	Blue	Red

123 Drill Stopper

Available Soon

- The length of the Stopper indicates the drilling depth
- Color coded for each length

L	6.2	7	8	9.5	11	12.5	14	16
								
	ODST05	ODST06	ODST07	ODST08	ODST10	ODST11	ODST13	ODST15

Direct Drill

- Direct drill: Dual-gear drill that has both pilot drill and twist drill capabilities
- Final drilling can be done right away without pilot drilling
- To prepare the apex area of the osteotomy after extraction socket

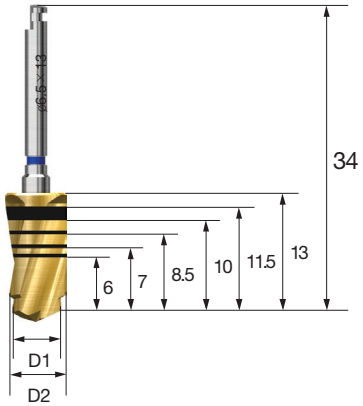

D1 / D2	Ø4.6 / 5.2	Ø4.6 / 5.5	Ø5.5 / 6.2	Ø5.5 / 6.5
	3D5213FNLC	3D5513FNLC	3D6213FNLC	3D6513FNLC

Taper Drill

- Taper drill specialized for taper (III type) fixture with built-in stopper
- Stopper drill with 1mm margin for countersink
- Color coded grip part indicates fixture diameter
- F = Fixture

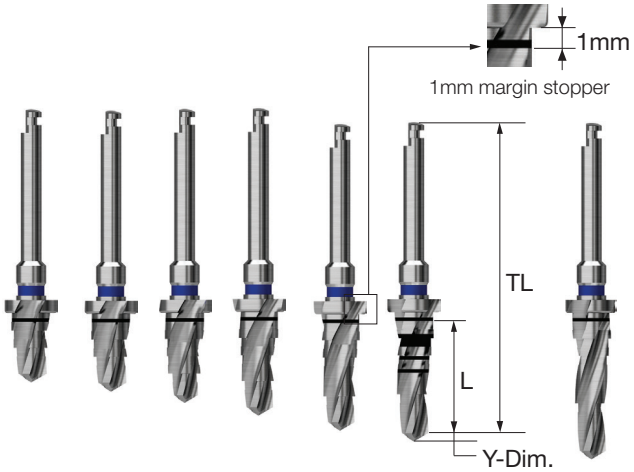

L	TL	F3.5	F4.0	F4.5	F5.0
6.0	30.5	TPTD3C**3506T**	TPTD3C**4006T**	TPTD3C**4506T**	TPTD3C**5006T**
7.0	31.5	TPTD3C**3507T**	TPTD3C**4007T**	TPTD3C**4507T**	TPTD3C**5007T**
8.5	33	TPTD3C**3508T**	TPTD3C**4008T**	TPTD3C**4508T**	TPTD3C**5008T**
10.0	34.5	TPTD3C**3510T**	TPTD3C**4010T**	TPTD3C**4510T**	TPTD3C**5010T**
11.5	34.5	TPTD3C**3511T**	TPTD3C**4011T**	TPTD3C**4511T**	TPTD3C**5011T**
13.0	36	TPTD3C**3513T**	TPTD3C**4013T**	TPTD3C**4513T**	TPTD3C**5013T**
15.0	38	TPTD3C**3515T**	TPTD3C**4015T**	TPTD3C**4515T**	TPTD3C**5015T**
Y-Dim.		0.8	0.9	1.0	1.0
Color		Yellow	Green	Blue	Red

Surgical Instruments

Taper Ultra Drill

- Taper drill specialized for taper ultra-wide fixture with built-in stopper
- Stopper drill with 1mm margin for countersink
- Color coded grip part indicates fixture diameter
- F = Fixture

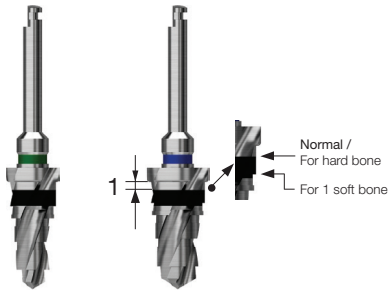

L	F6.0	F7.0
6	TPTD3C**6006T**	TPTD3C**7006T**
7	TPTD3C**6007T**	TPTD3C**7007T**
8.5	TPTD3C**6008T**	TPTD3C**7008T**
10	TPTD3C**6010T**	TPTD3C**7010T**
11.5	TPTD3C**6011T**	TPTD3C**7011T**
13	TPTD3C**6013T**	TPTD3C**7013T**
Color	Green	Blue

Long Shank Pilot Drill

- Guide drill for the next drill sequence
- Can be used to alter the path

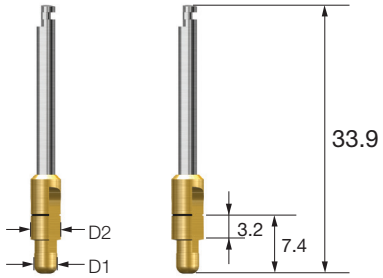

D1 / D2	Ø2.0 / 2.7	Ø2.0 / 3.0	Ø3.0 / 3.8	Ø3.0 / 4.1
	APD270C	APD300C	APD380C	APD410C

Cortical Drill 3 for Taper Fixture (ETIII, SSIII, USIII)

- Drill used to remove cortical bone in hard bone (for III type)
- Bottom band is for normal bone, and the top is for hard bone
- Recommend drilling to the bottom of the band
- F = Fixture

F3.5	F4.0	F4.5	F5.0
CD4C35	CD4C40	CD4C45	CD4C50

Taper Cortical Drill for Taper Fixture (ETIII, SSIII, USIII)

- Drill used to remove cortical bone in hard bone (used immediately after taper drill)
- Bottom of the band is for fixture insertion less than 8.5mm
  Top of the band is for fixture insertion more than 10mm
- Recommend drilling to the bottom of the band
- F = Fixture

F3.5	F4.0	F4.5	F5.0
TCD4C35	TCD4C40	TCD4C45	TCD4C50

Cortical Drill for Ultra-Wide

- Drill used to remove cortical bone in hard bone (for ultra-wide)
- For use for different fixture diameters
- Recommend drilling to the bottom of the band
- F = Fixture

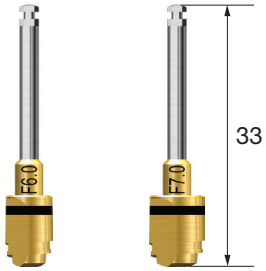

F6.0	F7.0
CD4C60	CD4C70

Parallel Pin

- Check the position and orientation of osteotomy after the initial drilling sequence

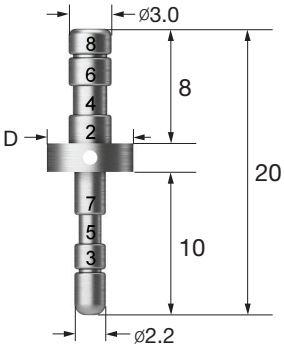

D	Ø4.0	Ø5.0	Ø6.0	Full Set
	APP400	APP500	APP600	APPS

Surgical Instruments

Depth Gauge

- A: to measure drill depth (7~15mm)
- B: to measure soft tissue height

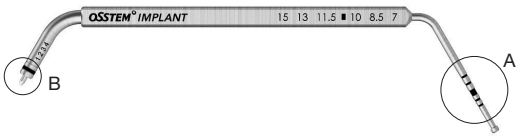

ADG

Depth Gauge (NEW)

- Combination of depth gauge and an open wrench

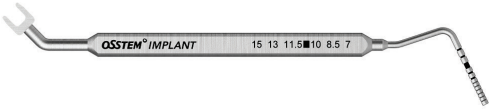

OSDG

Torque Wrench - Bar Type

- Used to adjust the implant location or tighten abutment, screw, etc.
- Apply torque by pulling bar to the line indicating the torque value

TQWCB / TW30B

NoMount Driver for ET

- Driver that can directly attach to fixture when inserting, using hand piece for procedure
- C = Connection

L \ C	Mini	Regular
Short	TSNMDMS	TSNMDRS
Long	TSNMDML	TSNMDRL

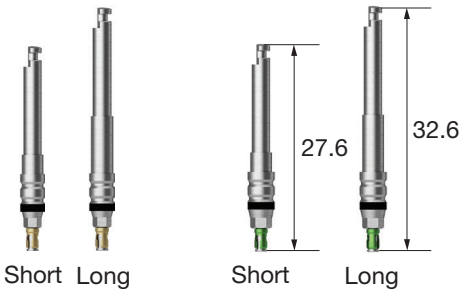

NoMount Torque Driver for ET

- Directly attaches to the fixture for insertion with wrench
- Check for correct and complete fit before insertion.
- Incorrect usage may cause it to break.
- C = Connection

L \ C	Mini	Regular
Short	GSNMT32S	GSNMT35S
Long	GSNMT32L	GSNMT35L

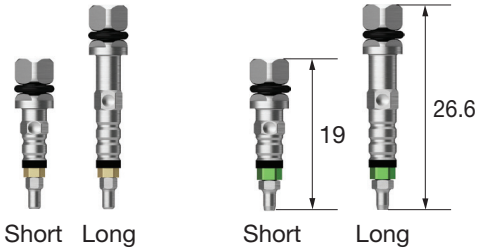

Fixture Driver for ET

- Directly attached to fixture, used to adjust final depth of insertion using wrench
- C = Connection

L \ C	Mini	Regular
Short	GSMFDS	GSRFDS
Long	GSMFDL	GSRFDL

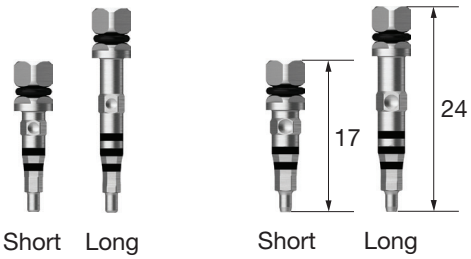

Torque Extension

- Extends the length of instruments by 10mm, connects to wrench

OTE

Simple Mount Driver

- Used to insert fixture with mount using hand piece

L	
Short	ASMDS
Long	ASMDL

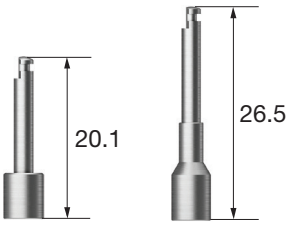

Surgical Instruments

Simple Mount Extension

- Used for manual torque application during fixture placement

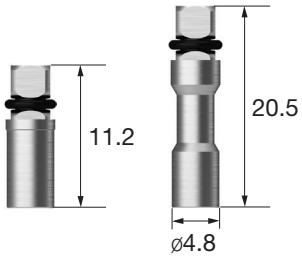

L	
Short	ASMES
Long	ASMEL

Removal Tool for Fixture Mount

- Used for removing the mount if the mount is stuck. Remove the mount screw before use.
- Used with Driver Handle or Torque Wrench
- Insert into mount and turning clockwise
- App = Application

App	Mini (ET,US)	Regular (ET,SS,US) / Wide (SS)	Wide (US)
	ERFM	HRFR	ERFW

Tissue Punch

- Tool used for flapless surgery procedure
- Laser marking at 2mm interval, easily measures gingiva height
- Packing unit : tissue punch + guide pin

※ Recommend using use tissue punch with a 0.7~1.5mm smaller diameter than the healing abutment

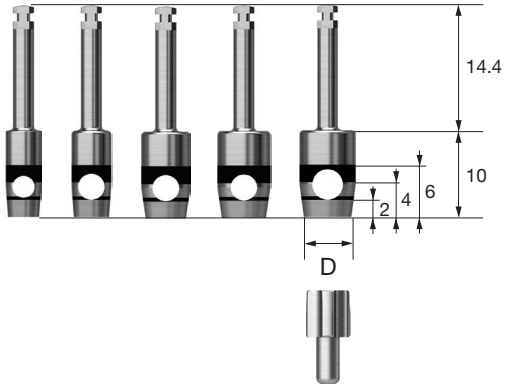

D	Ø3.3	Ø3.8	Ø4.3	Ø4.8	Ø5.3
	OSTP33	OSTP38	OSTP43	OSTP48	OSTP53
ET	Ø 4.0/4.5	Ø 4.5/5.0	Ø 5.0	Ø 6.0	Ø 6.0
SS	-	Ø 4.8	-	Ø 6.0	Ø 6.0
US	Ø 4.0	Ø 5.0	Ø 5.0	Ø 6.0	Ø 6.0

The application of Healing abutment

Bone Profiler

- Used to remove bone around fixture after first or second stage surgery
- Connect Guide Screw to the fixture and remove excess bone
- Guide screw protects fixture shoulder
- Packing unit : bone profiler + guide screw
- C = Connection

C / Healing Abutment D	Ø4.5	Ø5.5	Ø6.5 / 7.5
Mini / Regular	GSBP45	GSBP55	GSBP75
	Mini + Regular guide screw	Mini + Regular guide screw	Regular guide screw

Surgical Instruments

Trephine Drill

- Used to collect bone or remove a failed fixture
- Used to remove septal bone
- Can be used as an initial drill when inserting an ultra fixture

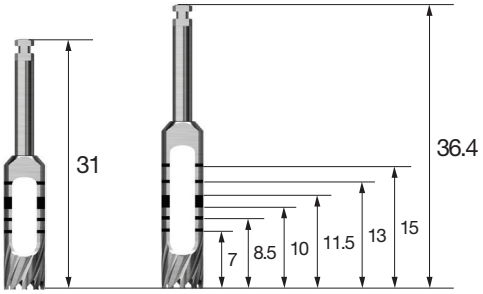

L \ D (Inner / Outer)	3.7 / 4.5	4.2 / 5.0	4.7 / 5.5	5.2 / 6.0	5.7 / 6.5	6.2 / 7.0
Short	TD37S	TD42S	TD47S	TD52S	TD57S	TD62S

Bone Mill

- Grinds collected autogenous bone

ABM

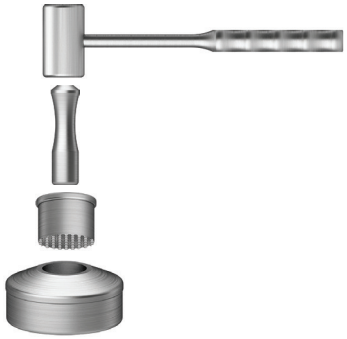

Prosthetic KIT (HPRSTKA)

Available for use | ETII / III TSII / III | SSII / III | USII / III | Ultra-wide

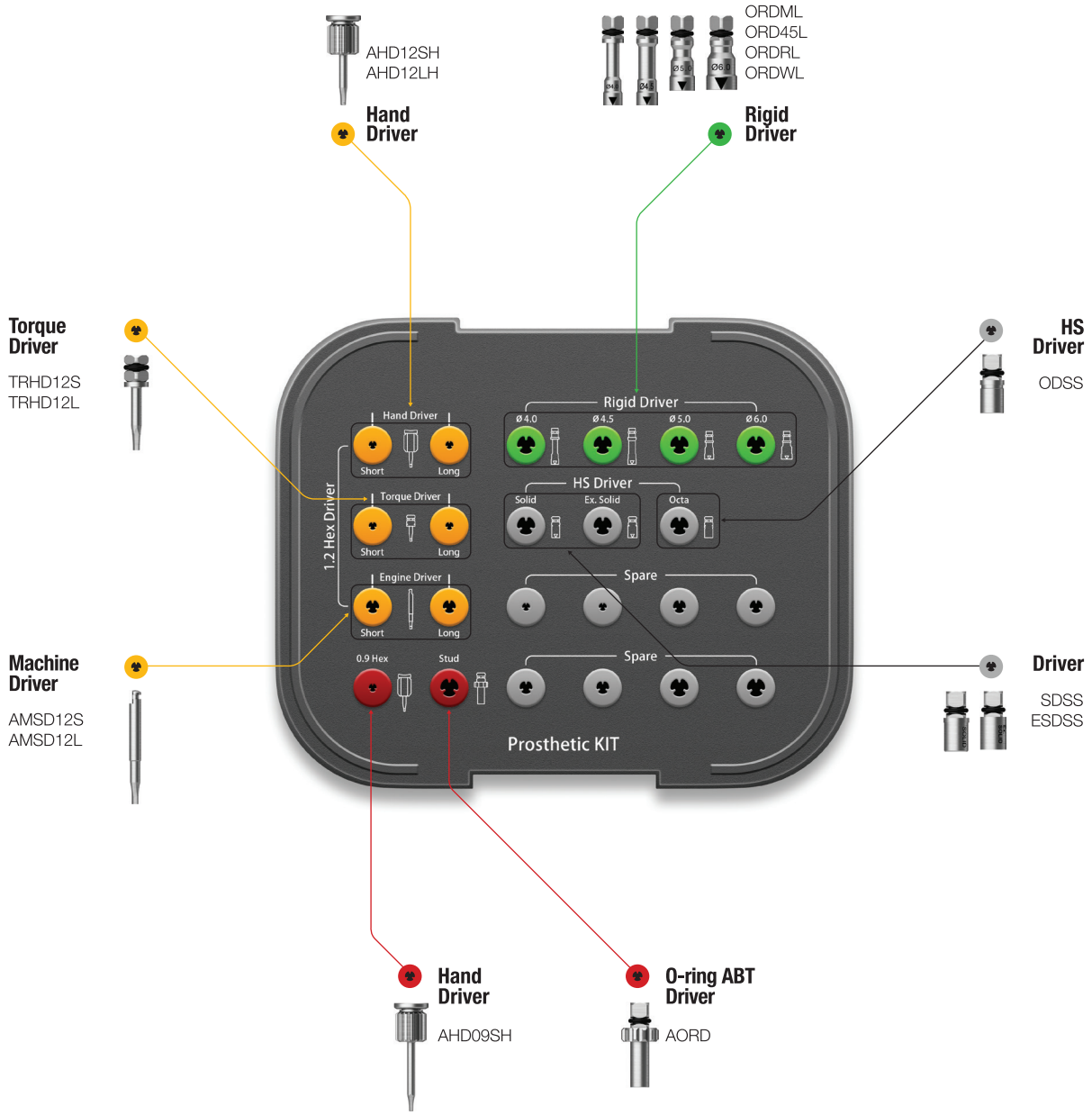

Prosthetic Instruments

Hand Driver

- Manual driver
- Internal hex type L is 11mm

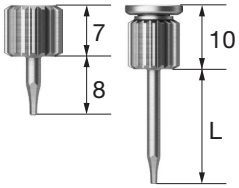

0.9 hex

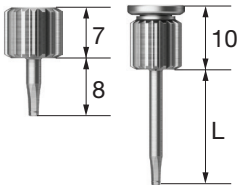

1.2 hex

L \ Type	0.9 Hex	1.2 Hex
Ex.Short (8)	AHD**09MSH**	AHD**12MSH**
Short (13)	AHD**09SH**	AHD**12SH**
Middle (15)	-	AHD**12MH**
Long (18)	AHD**09LH**	AHD**12LH**
Ex.Long (25)	-	AHD**12EH**

Machine Screw Driver

- 1.2 hex driver for engine hand piece
- Internal hex type L is 8mm

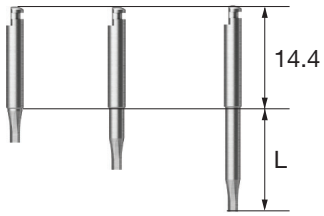

Short Long Extra long

L \ Type	0.9 Hex	1.2 Hex
Short (5.6)	AMSD**09S**	AMSD**12S**
Long (11.6)	AMSD**09L**	AMSD**12L**
Ex.Long (17.6)	-	AMSD**12E**

Application				
Driver applicable product (common for hand, machine screw, and torque driver)	Cover screw (US mini)	Healing abutment, UCLA, Cemented abutment screw, Mount screw	Esthetic abutment screw regular, Esthetic-low abutment screw, standard	Wide esthetic-low abutment screw

Torque Driver

- Driver for torque wrench
- May bend or break if excessive torque is applied
- Damage is possible even at low torque if not fully engaged.
- When applying torque, apply vertically pressure (do not tilt)
- If the tip is bent or stripped due replace immediately

Short Long Extra long

L \ Type	0.5 Slot	0.9 Hex	1.2 Hex
Ex.Short (8)	-	-	TRHD**12MS**
Short (13)	TRSD**05S**	TRHD**09S**	TRHD**12S**
Middle (15)	-	-	TRHD**12M**
Long (20)	TRSD**05L**	TRHD**09L**	TRHD**12L**
Ex.Long (25)	TRSD**05E**	-	TRHD**12E**

O-ring Abutment Driver

- Driver specific for O-ring abutments

AORD

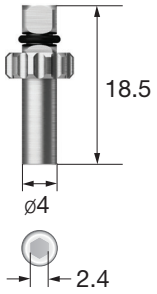

Rigid Outer Driver

- Driver specific for rigid abutments
- Recommended tightening torque : 30Ncm

L \ Abutment D	Ø4.0	Ø4.5	Ø5.0	Ø6.0
Short (16.5)	ORDMS	ORD45S	ORDRS	ORDWS
Long (21.5)	ORDML	ORD45L	ORDRL	ORDWL

Prosthetic Instruments

Solid Abutment Driver

- Driver specifici for solid abutments
- AConnect to the Solid Abutment by matching up the groove with the triangle indicator
- Recommended tightening torque : 30Ncm

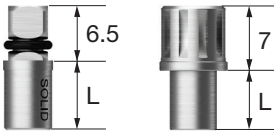

Square Round

Regular

L \ Type	Square	Round
Short (6)	SDSS	SDRS
Long (12)	SDSL	SDRL

Wide

L \ Type	Square
Short (10)	SD60S

Excellent Solid Abutment Driver

- Driver specific for excellent solid abutments
- Connect to Excellent Solid Abutment by matching up the groove with the triangle indicator
- Recommended tightening torque : 30Ncm

Square Round

Regular

L \ Type	Square	Round
Short (6)	ESDSS	ESDRS
Long (12)	ESDSL	ESDRLC

Wide

L \ Type	Square
Short (10)	ESD60S

Octa Abutment Driver

- Driver specific for octa abutment
- Recommended tightening torque : 30Ncm

L \ Type	Square	Round
Short	ODSS	ODRSC
Long	ODSL	ODRL

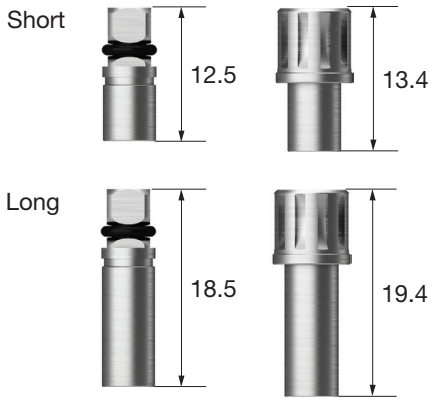

Driver Handle

- Connects to torque driver

TIDHC

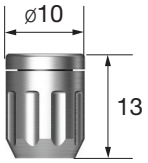

Finishing Reamer Set

- Tool used to remove the excess cast after plastic coping is cast

FRSC

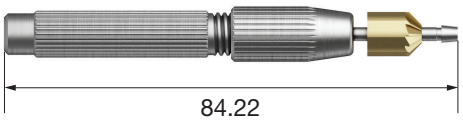

Reamer user guide

1. Select a Reamer Tip of the same size as the abutment and connect to burn-out cylinder after casting.
2. Hold casting body and turn reamer bite with consistent force
3. Ream until cutting stops/ends

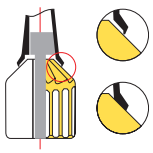

Reamer Bite

- Cutting edge removes excess cast after plastic coping is cast

FRBC

CAS-KIT (HCRSNK)

Base components

Bone Carrier Head
SNBCH30

Bone Carrier
SNBCS35

Bone Condenser
SNBC1114

Available for use: ETII / III TSII / III | SSII / III | USII / III

SNDR2813TL
Ø2.8 CAS-Drill

SNDR3113TL
Ø3.1 CAS-Drill

SNDR3313TL
Ø3.3 CAS-Drill

SNDR3613TL
Ø3.6 CAS-Drill

SNDR3813TL
Ø3.8 CAS-Drill

SNDR4113TL
Ø4.1 CAS-Drill

Stopper
SNST7
Yellow

Guide Drill
SNGD2027TL

Stopper
SNST2
SNST8
Purple

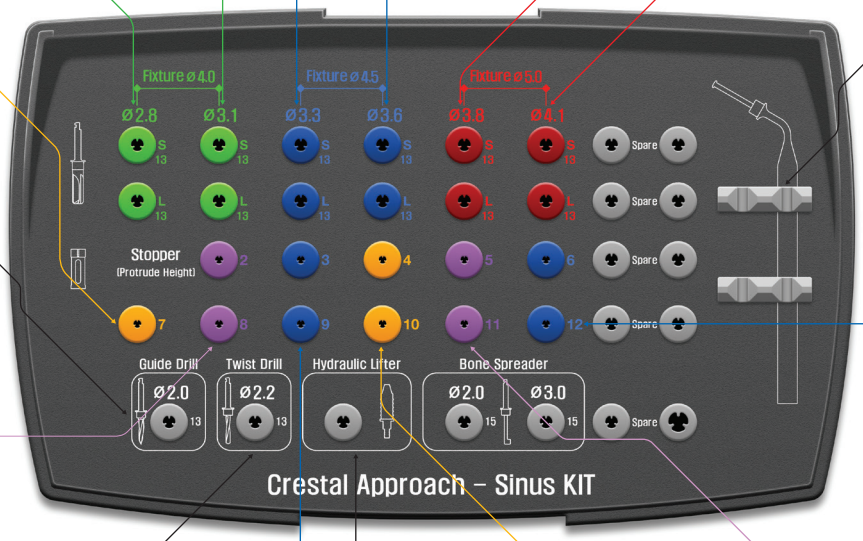

Depth Gauge
SNDG

Stopper
SNST6
SNST12
Blue

Twist Drill
SNTD2213TL

Stopper
SNST3
SNST9
Blue

Hydraulic Membrane Lifter
SNMLS

Stopper
SNST4
SNST10
Yellow

Stopper
SNST5
SNST11
Purple

CAS-KIT Surgical Instruments

CAS-Drill

- Crestal Approach Sinus Drill forms a conical bone lid and lifts membrane safely
- Superior bone removing capability from low speed to high speed, collects autogenous bone at low speeds
- Safely advance to the floor of sinus using stoppers (1mm increment)
- Final drill diameter based on bone density, regardless of straight or tapered fixture type

D	Ø2.8	Ø3.1	Ø3.3	Ø3.6	Ø3.8	Ø4.1
	SNDR2813TL	SNDR3113TL	SNDR3313TL	SNDR3613TL	SNDR3813TL	SNDR4113TL

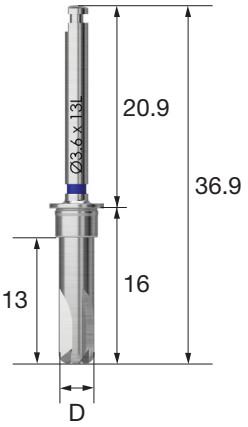

Guide Drill

- Drill used to mark fixture insertion location
- Used to modify side wall of extraction site with its side blade
- Marker on apex at 2mm

D	Ø2.0 / 2.7
	SNGD2027TL

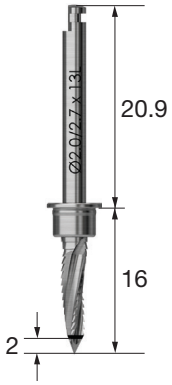

Ø2.2 Twist Drill

- Recommend drilling 2mm below the floor of sinus
- Use with stopper for safety
- Apex tip 0.6mm

D	Ø2.2
	SNTD2213TL

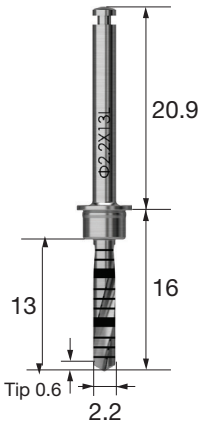

Hydraulic Membrane Lifter Set

- Lift sinus membrane using water pressure
- Used for all CAS-drill ø2.8~ø4.1 drilled holes
- Contraindication:
  - Not recommended for patients with inflammation of maxillary sinus (Sinusitis)
  - Not recommended for patients with severe or complex sinus floor morphologies

D	Ø2.6 / 5.0
	SNMLS

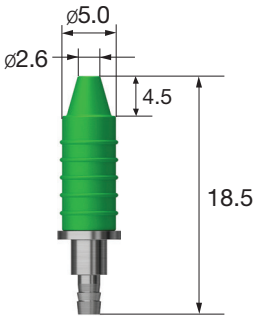

Stopper

- Number on each stopper indicates drilling depth length.
- Color coded per length
- Can be used up to 50 times before replacement

L	2	3	4	5	6	7	8	9	10	11	12
	SNST2	SNST3	SNST4	SNST5	SNST6	SNST7	SNST8	SNST9	SNST10	SNST11	SNST12
Color	Purple	Blue	Yellow	Purple	Blue	Yellow	Purple	Blue	Yellow	Purple	Blue

Bone Carrier

- Used to deliver bone material into the sinus cavity
- Adjust/Fixes head by tightening the back of body part
- Head(SNBCH30 or SNBCH35) can be replaced

SNBCS35

Bone Carrier Head

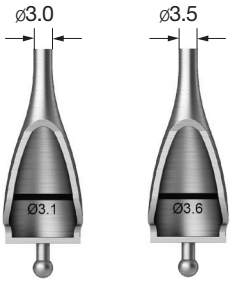

- Used to deliver bone material into the sinus cavity
- SNBCH30: Use after drilling with CAS-drill ø3.1/ø3.3
- SNBCH35: Use after drilling with CAS-drill ø3.6/ø3.8/ø4.1
- Fill bone material upto the bottom of the band, push material through gradually with bone condenser into the sinus cavity completely, and repeat the procedure

D	Ø3.1	Ø3.6
	SNBCH30	SNBCH35

Bone Condenser

- Tool to push bone material into the sinus cavity
- SNBCH30: Uses ø1.1 / SNBCH35 : Uses ø1.4

D	Ø1.1 / 1.4
	SNBC1114

CAS-KIT Surgical Instruments

Hydraulic Membrane Lifter Tube

- Attach to hydraulic membrane lifter

SNMT

Depth Gauge (CAS)

- Check the opening of the sinus floor and measure the depth of remaining bone

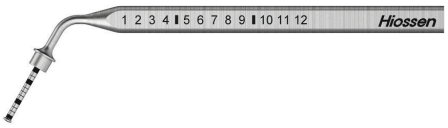

SNDG

LAS-KIT (HLRSNK)

- Lateral Approach - Sinus KIT (LAS-KIT) is optimized for a lateral approach sinus lift
- Dome drill and core drill, safely form lateral window and come in diameters of ø5.5 and ø7.0
- LAS drill uses a stopper system (0.5mm increment), which adjusts the depth, and safely forms a window without perforating the membrane

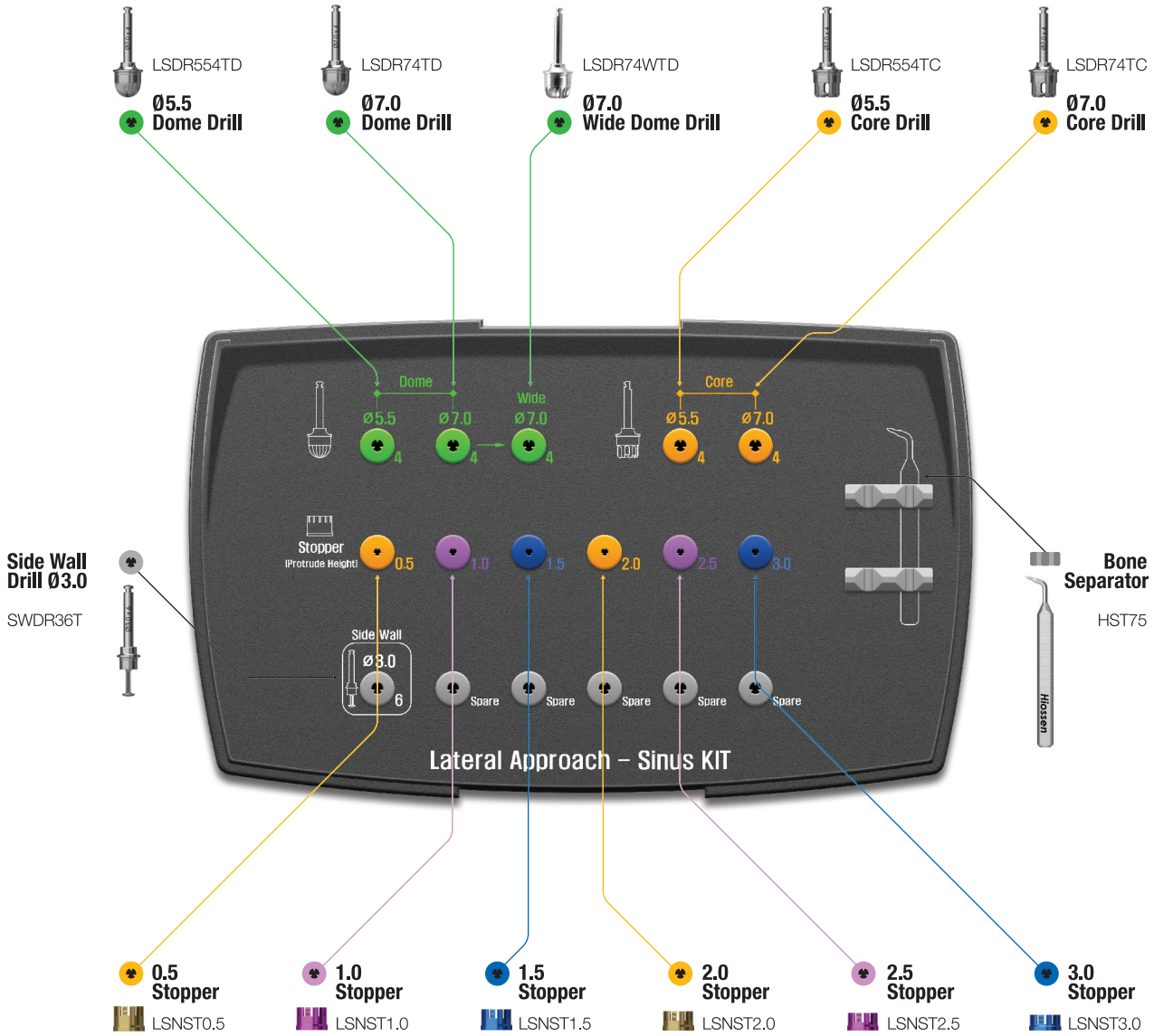

LAS-KIT Surgical Instruments

Dome Drill

- Forms window and collects autogenous bone
- Optimized cutting force due to the combination of macro cutting edge and micro cutting edge
- Stopper attachment controls depth
- Cutting speed : 1,200~1,500rpm

※ Excessive drilling will damage the membrane

L \ D	Ø5.5	Ø7.0	Wide Ø7.0
25	LSDR554TD	LSDR74TD	LSDR74WTD

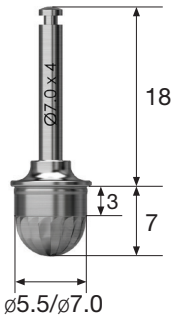

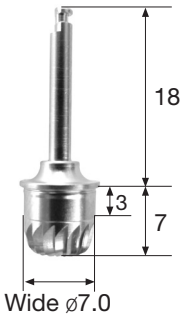

Core Drill

- Creates a bone lid when forming the lateral window
- Same cutting edge design as the CAS-KIT enhances safety
- Cutting speed : 1,200~1,500rpm

※ Excessive drilling will damage the membrane

L \ D	Ø5.5	Ø7.0
25	LSDR554TC	LSDR74TC

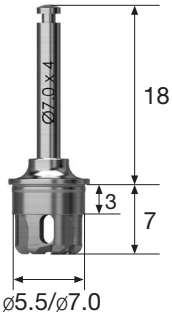

Side Wall Drill

- Expands window and trims the rough edges around the window
- Cutting speed : 1,500rpm

SWDR36T

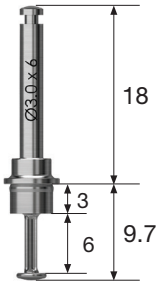

Height of side cutting part (mm)	1.0	2.0	3.0	4.0	5.0
CAS-KIT stopper (mm)	8.0	9.0	10	11	12
Side wall drill + CAS-KIT stopper					

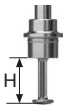

※ Used for all CAS-KIT stoppers and can adjust depth

Bone Separator

- Removes bone lid inside the core drill

HST75

Stopper

- Number on each stopper indicates length of the drilling depth
- Color coded length
- Can be used up to 50 times before replacement

L	0.5	1.0	1.5	2.0	2.5	3.0
						
	LSNST0.5	LSNST1.0	LSNST1.5	LSNST2.0	LSNST2.5	LSNST3.0
Color	Yellow	Purple	Blue	Yellow	Purple	Blue

ESSET KIT (HESEK)

Available for use

ETII / III TSII / III | SSII / III | USII / III | Ultra-wide

Base components

Torque Wrench
TQWCB / TW30B

Depth Gauge
ODG

CERM70A

Ø7.0 Crest Remover

2D1808LC01
2D1810LC01
2D1811LC01

Twist Drill

Saw

RA231DC070
RA231DC100
58231DC204130

Ø5.0 Crest Remover

CERM50A
CERM50S

Mount Extension

ASMEL

SET Drill I

SET162808
SET162810
SET162811

SET Drill II

SET223608
SET223610
SET223611

SET Drill III

SET274108
SET274110
SET274111

SET Drill IV

SET314508
SET314510
SET314511

Crest Remover

- Horizontal modification of the crest bone
- Recommended speed for angled type : 1,200~1,500rpm
- Recommended speed for straight type : 15,000~30,000rpm

L \ D	Ø5.0	Ø7.0
29	CERM50A	CERM70A
45	CERM50S	-

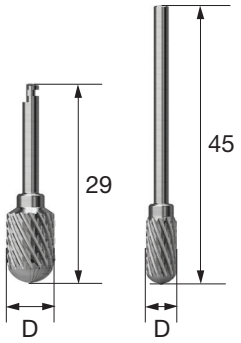

Twist Drill

- Marks the fixture location
- Controls depth with built-in stopper
- Recommended speed : 1,200~1,500rpm

L	TL	D	Ø1.8
8.5	33		2D1808LC01
10	34.5		2D1810LC01
11	36		2D1811LC01

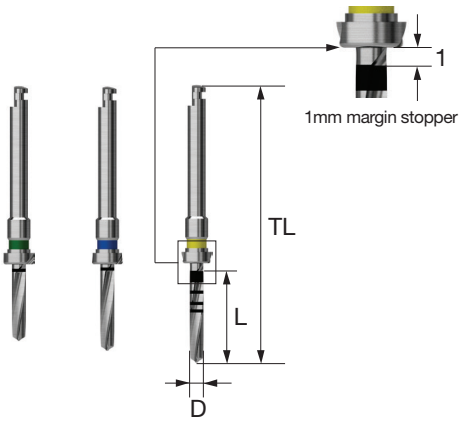

Saw

- For ridge modification and splitting
- Cut vertically and incise the whole part from mesial → distal direction
- Recommended speed : 1,200~1,500rpm
- T = Thickness

T	Ø7.0	Ø10.0	Ø13.0
0.3	RA231DC070	RA231DC100	58231DC204130

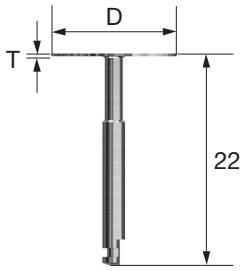

ESSET KIT Surgical Instruments

SET Drill

- Gradually expands bone width
- Use SET drill sequentially according to the diameter of fixture
  i.e. F4.0 : I → II → III / F4.5 : I → II → III → IV
- Recommended speed : 25~35rpm

L \ Type	I	II	III	IV
D1 / D2	Ø1.6 / 2.8	Ø2.2 / 3.6	Ø2.7 / 4.1	Ø3.1 / 4.5
8.5	SET162808	SET223608	SET274108	SET314508
10	SET162810	SET223610	SET274110	SET314510
11.5	SET162811	SET223611	SET274111	SET314511

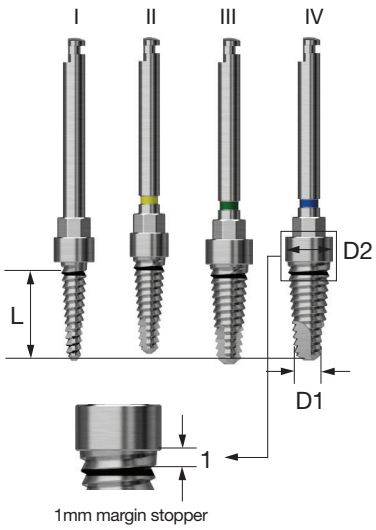

Mount Extension

- Used to apply manual torque during the process of inserting / removing SET drill into alveolar bone

ASMEL

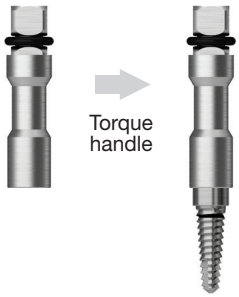

Torque Wrench

- Used to apply torque to SET drill

TQWCB / TW30B

Depth Gauge (ESSET)

- Combination of Open wrench and depth gauge

ODG

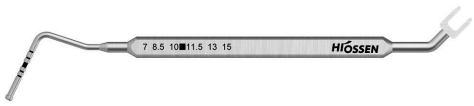

OsstemGuide KIT (OGDK)

Base components

Kit Steel bowl

AKB*

Ratchet Wrench

CITQW-1185A*

Open Wrench

ASOW*

- Optimized for Tapered implants with internal connection.

※ 7mm and 15mm implants require additional drills (not included in the kit)

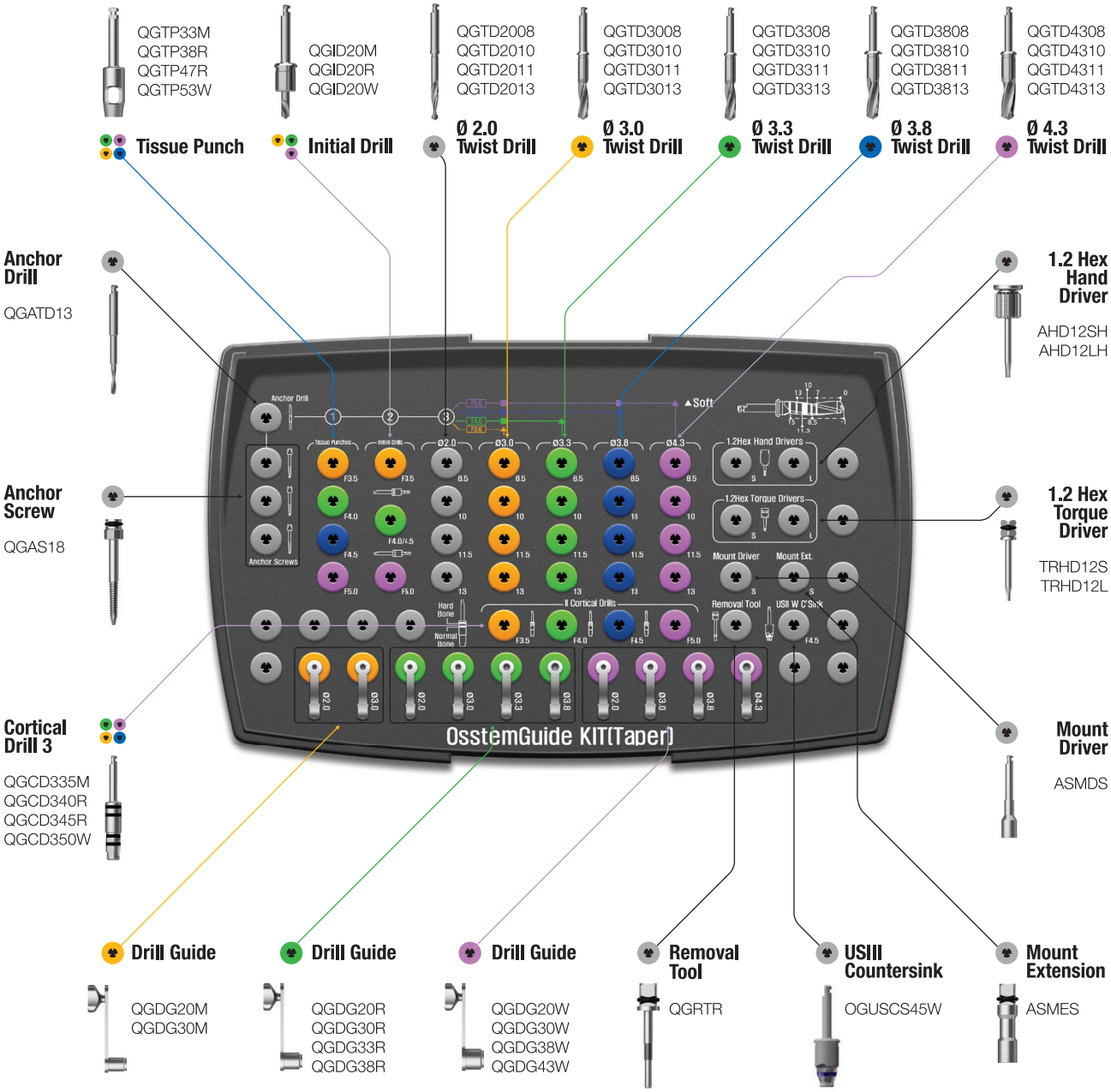

OsstemGuide KIT Components

OsstemGuide Twist Drill

- All drills feature stoppers.
- Drills are designed to minimize soft tissue damage during flapless surgery.
- Drills are 10 mm longer than regular surgical drill

※ 7mm and 15mm drills are available through Special Order Only; Not included in the Kit.

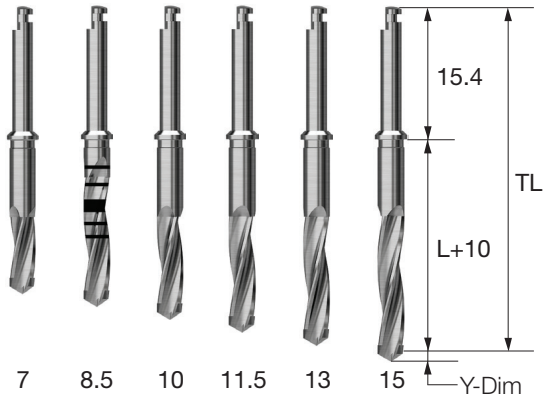

L (TL) \ D	ø2.0	ø3.0	ø3.3	ø3.8	ø4.3
*7.0 (32.4)	QGTD2007	QGTD3007	QGTD3307	QGTD3807	QGTD4307
8.5 (33.9)	QGTD2008	QGTD3008	QGTD3308	QGTD3808	QGTD4308
10 (35.4)	QGTD2010	QGTD3010	QGTD3310	QGTD3810	QGTD4310
11.5 (36.9)	QGTD2011	QGTD3011	QGTD3311	QGTD3811	QGTD4311
13 (38.4)	QGTD2013	QGTD3013	QGTD3313	QGTD3813	QGTD4313
*15 (40.4)	QGTD2015	QGTD3015	QGTD3315	QGTD3815	QGTD4315

OsstemGuide Mount

- Special mount for OsstemGuide.
- Color-coded to match the surgical guide sleeve

ET System	D	Ø3.5	Ø4.0 / 4.5	Ø5.0
				
		QGHGMM	QGHGMR	QGHGMW

OsstemGuide Cylinder (Pin)

- For prosthetic fabrication.
- Attach lab analog through surgical guide for casting
- Color-coded to match the surgical guide sleeve

ET System	D	Ø3.5	Ø4.0 / 4.5	Ø5.0
				
		QGHGCGM	QGHGCGR	QGHGCGW

MS KIT (OMSK)

Base components

Depth Gauge (MS)
MSDG

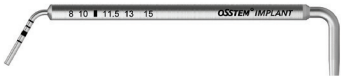

Ratchet Wrench
CITQW-1185A

Available for use MS

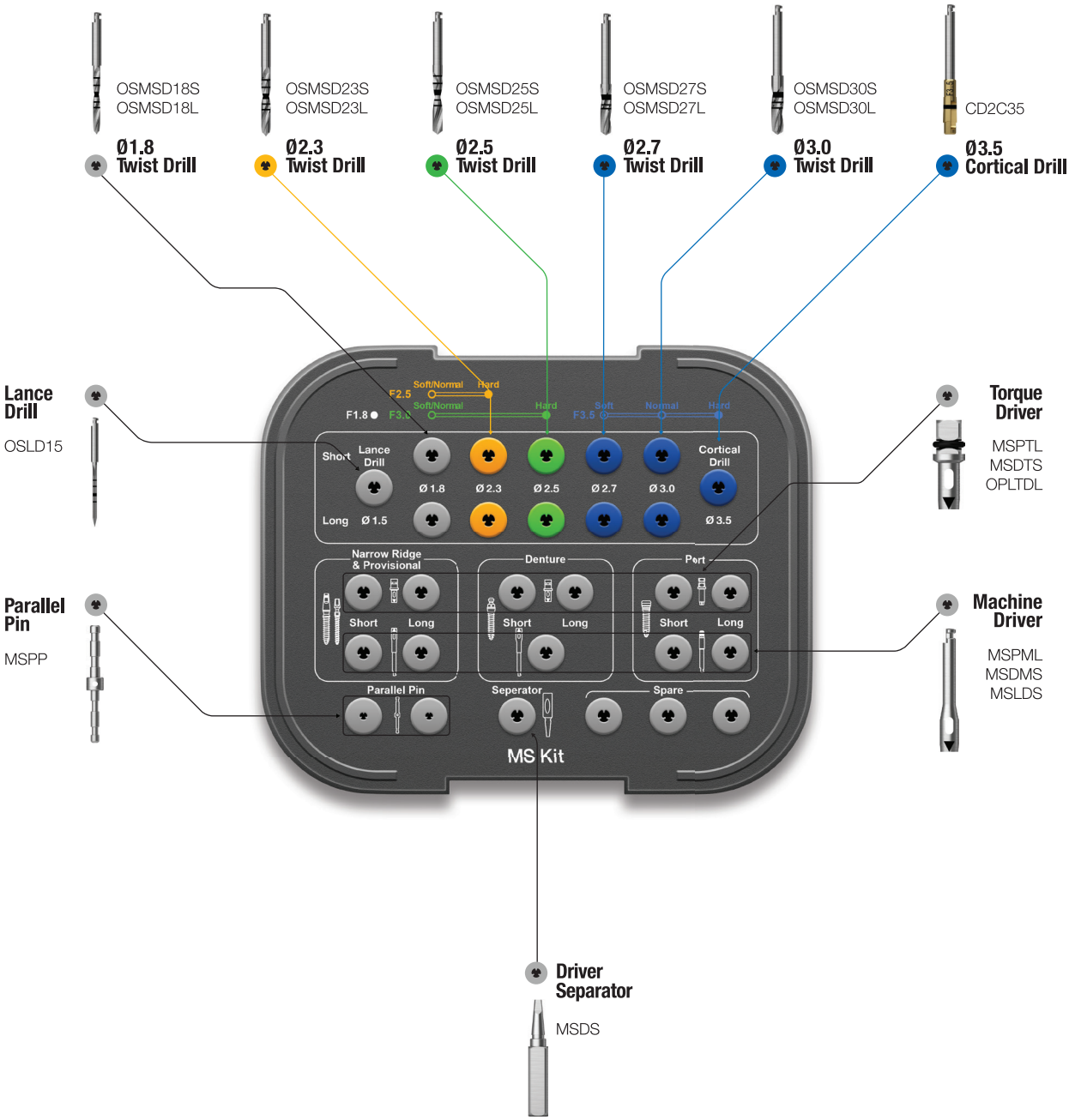

ESR KIT Easy Screw Removal KIT (OESRK) NEW

Base components

Abutment Removal Tip
OARTML OARTRL

Slot Driver
OTSD07

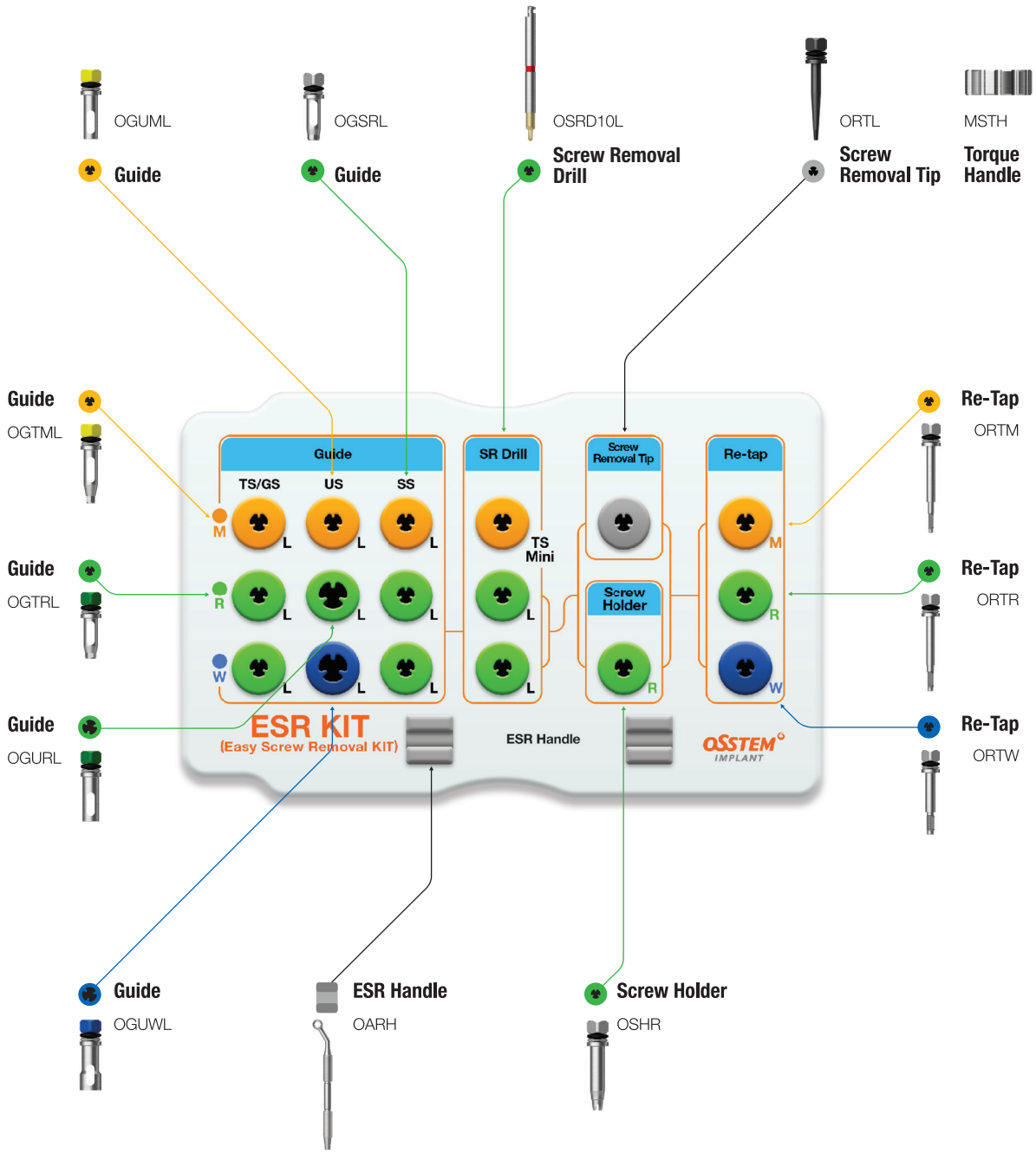

ESR KIT Surgical Instruments

Reverse Driver

- Tool used to remove a fractured screw
- Must be used with the Guide that fits the fixture
- Insert until the red band is in the Guide and turn counterclock wise to remove the screw
  *Use the Screw Holder to remove fractured screws
- Use manually / Rotate counterclock wise / Number of use: 10 times

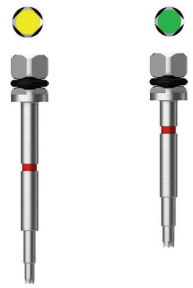

Mini Regular/Wide

L \ F	Mini	Regular / Wide
Short	-	ORVDRS
Long	ORVDML	ORVDRL

Screw Removal Drill (SR Drill)

- Used to create a hole in the fractured screw
- Shavings must be suction and irrigate with water throughly
- Short and long specifications suitable for different intermaxillary spaces
- Drill until the red band cannot be seen
- Recommended speed: 1,200~1,500rpm in reverse
- Number of uses: 5

※ Must be used with the guide / Do not apply excessive vertical force / Do not immerse in hydrogen peroxide

- F = Fixture

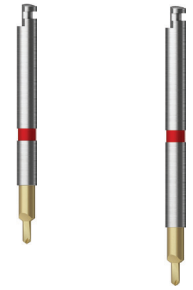

Short Long

L \ F	Mini (ET/GS)	Regular / Wide (ET/GS/SS/US)
Short	OSRD08S	OSRD10S
Long	OSRD08L	OSRD10L

Guide

- Guide used for center and prevent wobbling of the reverse driver, screw removal drill (SR drill), and re-tap
- Short and long used according to intermaxillary spaces
- Used in combination with the ESR handle
- F = Fixture

F \ Type	ET/TS (Hex)		SS (Octa)		US (Hex)	
	Short	Long	Short	Long	Short	Long
Mini	OGTMS	OGTML	OGUMS	OGUML	OGUMS	OGUML
Regular	OGTRS	OGTRL	OGSRS	OGSRL	OGURS	OGURL
Wide	-	-	OGSRS	OGSRL	OGUWS	OGUWL

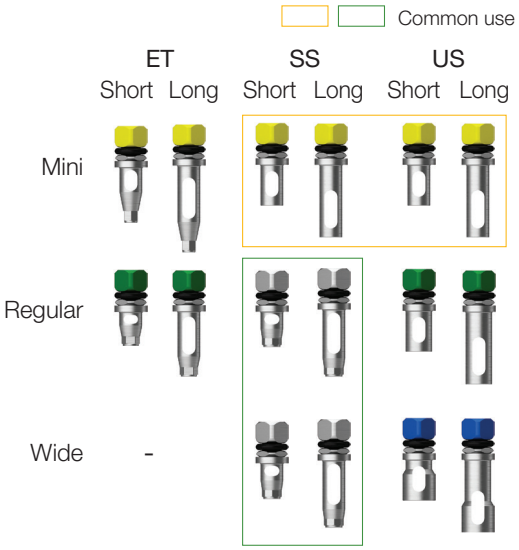

Torque Handle

- Handle for manual torquing

MSTH

Screw Removal Tip (SR Tip)

Short Long

- Removes fractured screw. Insert into hole drill by Screw Removal Drill.
- Rotate counterclock wise

L	
Short	ORTS
Long	ORTL

Screw Holder

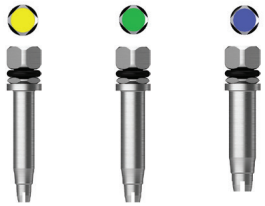

Mini Regular Wide

- If part of fractured screw is protruding, remove with screw holder
- Color coded for easy selection
- F = Fixture

F	Mini	Regular	Wide
	OSHM	OSHR	OSHW

Re-tap

Mini Regular Wide

- Tool that rethreads the fixture's internal connection
- Used with the torque wrench or ratchet wrench, forms thread by hand
- F = Fixture

F	Mini (M1.6)	Regular (M2.0)	Wide (M2.5)
	ORTM	ORTR	ORTW

ESR KIT Surgical Instruments

ESR Handle

- Stabilizes connecting guide

OARH

Abutment Removal Tip

Mini Regular

- Removes factured or jammed abutments and mounts
- Insert into fractured abutment hole, turn counterclockwise. Rock back and forth to loosen and remove with forceps
- Can be used to remove Mini abutment screw with a stripped hex.
  - After attaching to hex turn counterclockwise
- F = Fixture

F	Mini	Regular
	OARTML	OARTRL

Transfer Abutment Separate Tool

Driver Body

- Remove jammed abutment of non-hex type transfer abutment
- The tip is for mini abutments; the next step for regular abutments
- Remove abutment screw, insert Separate Tool Body into the abutment, tighten clockwise with Driver and remove the abutment. However, if there is difficulty separating the abutment, attach a ratchet wrench for extra torque

Driver	Body	Set
TASD	TASB	TAST

Slot Driver

- Used after grinding a slot with a ø0.8 bur when the hex of healing abutment, cover screw, and abutment screw is stripped

OTSD07

EFR KIT Easy Fixture Removal KIT (OSFRK) NEW

Base components

Fixture Wrench

FRDFE

Torque Wrench

TW400B

Available for use

ETII / III TSII / III | SSII / III | USII / III | Ultra-wide

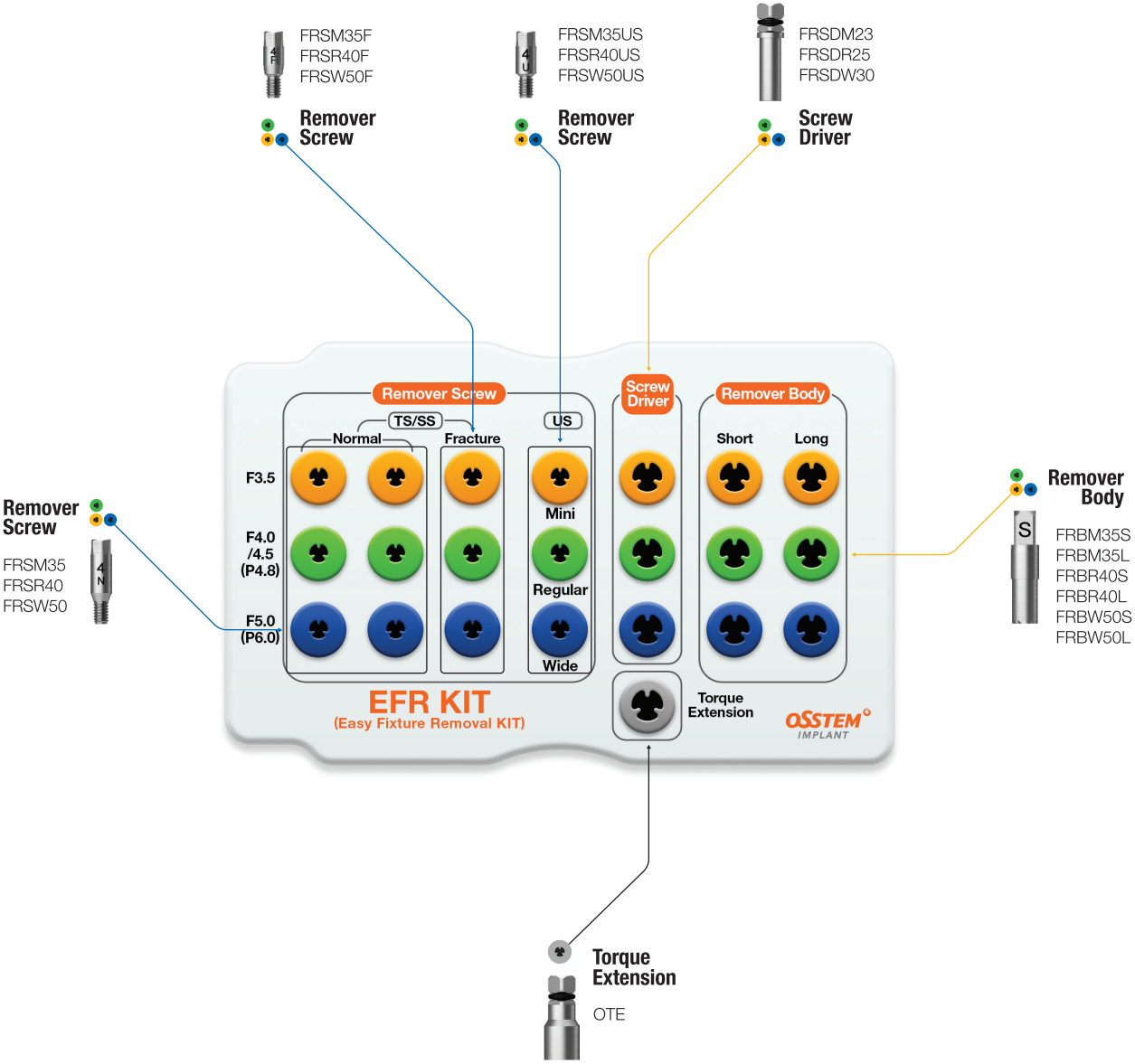

EFR KIT Surgical Instruments

Remover Screw

- When securely fastened to the fixture, it serves as supporting structure for the Remover Body
- Use the proper type that matches the diameter of the fixture to be removed (ET/SS/US, normal/fracture)
- Use "Fracture" when removing fractured fixture
- Recommend tightening torque : 100Ncm
- F = Fixture
- P = Platform

Type	F / P	Mini Ø3.5 / -	Regular Ø4.0~4.5 / P4.8	Wide Ø5.0 / P6.0
ET/SS	Normal	FRSM35	FRSR40	FRSW50
	Fracture	FRSM35F	FRSR40F	FRSW50F
US		FRSM35US	FRSR40US	FRSW50US

Screw Driver

- Driver for Remover Screw
- Recommend tightening torque : 100Ncm
- F = Fixture

F	Mini	Regular	Wide
	FRSDM23	FRSDR25	FRSDW30

Remover Body

- Connects to Remover Screw to apply torque to the fixture.
- Use the proper type that matches the diameter of the fixture to be removed
- F = Fixture

F	Mini	Regular	Wide
Short	FRBM35S	FRBR40S	FRBW50S
Long	FRBM35L	FRBR40L	FRBW50L

Torque Extension

- Extends the length (10mm) of screw driver and remover body

OTE

Torque Wrench

- Tightens Screw Driver and remove fixture using Remover Body
- Maximum torque : 400Ncm (increments of 100Ncm)
- After use, store after washing and sterilizing

TW30B/TQWCB

Fixture Wrench

- Wrench used to seperate the fixture from the Remover Body

FRDFE

Osteo KIT (OSTK)

- Concave : Instruments for maxillary sinus floor augmentation to vertically increase the amount of alveolar bone that can be used within maxillary molar area
- Expanding : Instrument for increasing initial stability of an implant by preserving bone and densifying trabecular bone of poor bone quality
- Stopper system to adjust depth

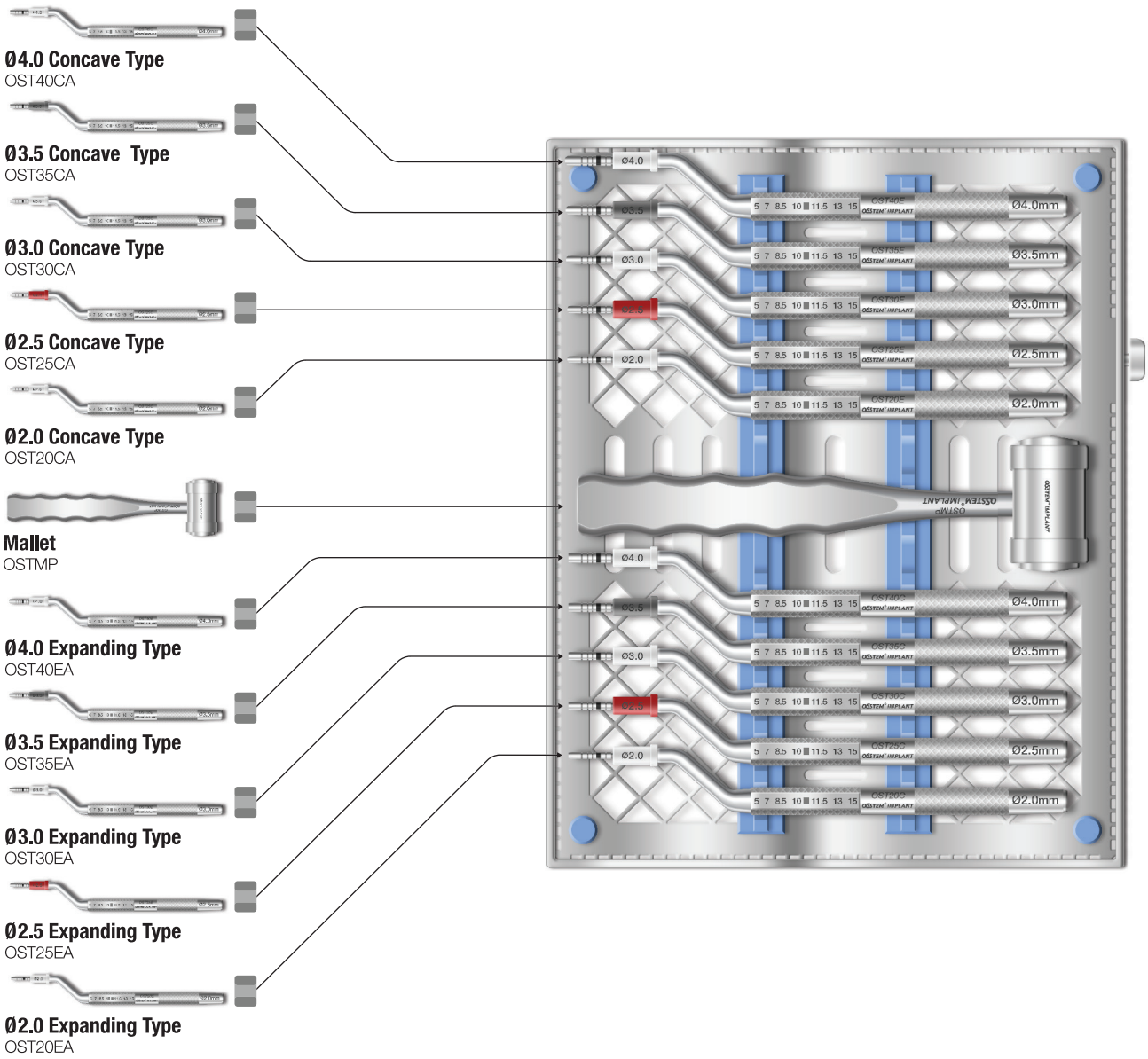

Sinus KIT (ASLK)

- Instruments used for maxillary sinus membrane elevation and grafting procedure
- Sinus Currette for lateral approach sinus lift
- Components
  - Freer elevator : OFE
  - Bone graft carrier : OBGC
  - Membrane separator (circle type) : OMSC
  - Sinus currette-short : OSCS
  - Sinus currette-long : OSCL

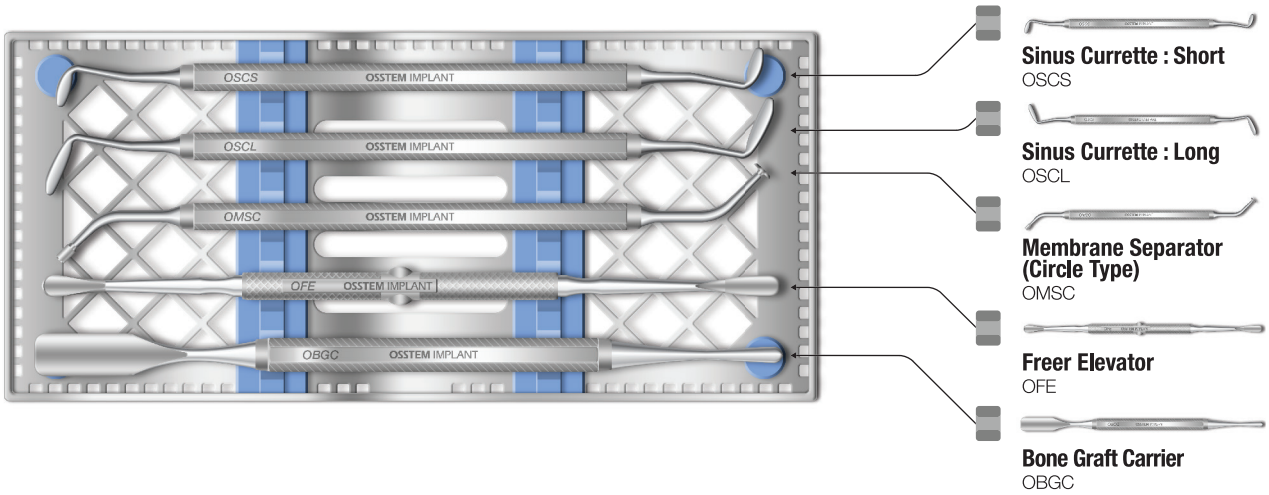

Bone Spreader KIT (HBNSPK)

- Instruments for expanding a narrow alveolar ridge
- Offset type for more convenient procedures
- Components
  - OBSO22F, OBSO28F, OBSO35F, OBSO35R

Bone Spreader Chisel
OBSO35R

Bone Spreader Chisel
OBSO35F

Bone Spreader Chisel
OBSO28F

Bone Spreader Chisel
OBSO22F

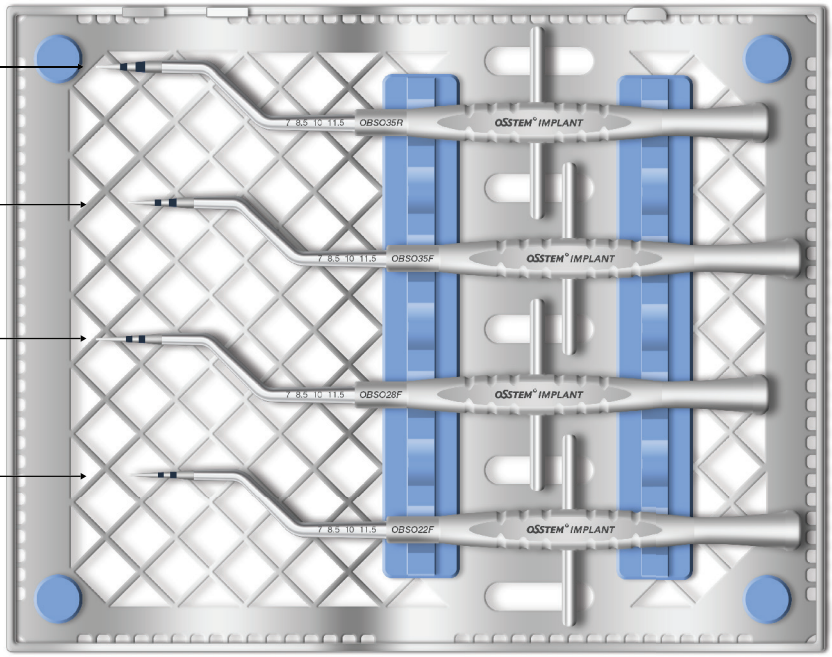

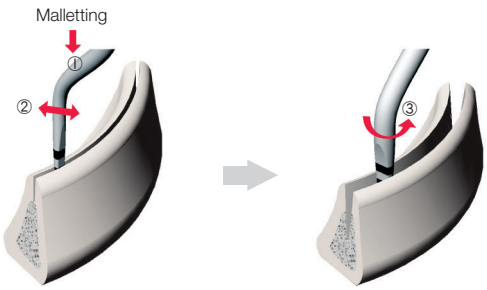

Direction for use : refer to the above illustration

- Use for alveolar bone expansion
- Offset type for easy operation
- Markers corresponds to the implant length.

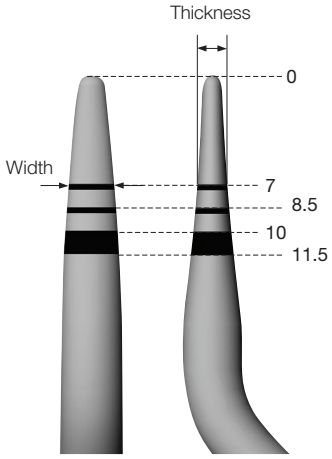

(Unit : mm)

Code	Spec. \ Tip length	7	8.5	10	11.5
ORSO22F	Thickness	1.15	1.3	1.45	1.6
	Width	2.1	2.2	2.2	2.2
ORSO28F	Thickness	1.15	1.3	1.45	1.6
	Width	2.65	2.8	2.8	2.8
ORSO35F	Thickness	1.3	1.45	1.6	1.8
	Width	3.3	3.5	3.5	3.5
ORSO35R (round type)	Thickness	1.85	2.1	2.3	2.55
	Width	3.3	3.5	3.5	3.5

Ridge Split KIT- Straight (ORSSK)

- Chisel: Instruments for expanding a narrow alveolar ridge
- Blade holder: When it is difficult to incise bone using a bur in poor bone, malletting can be done by attaching #15 blade
- Components
  - Ridge split chisel : ORSS15, ORSS20, ORSS25, ORSS30
  - Blade holder : ORSBH

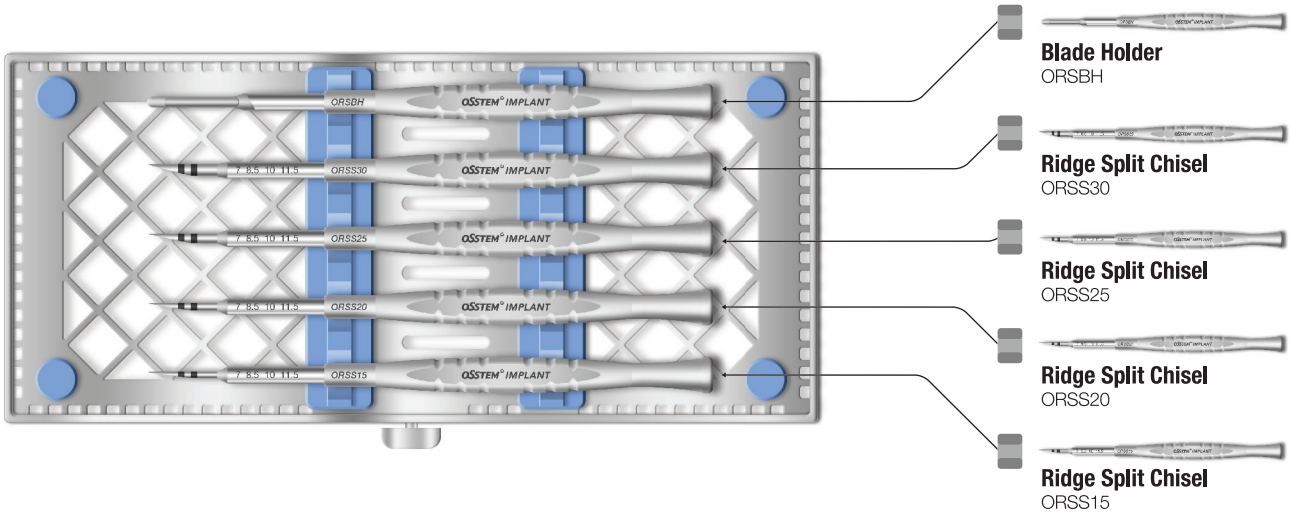

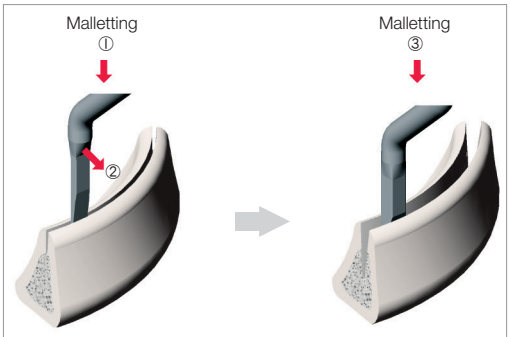

Directions for use : refer to the above illustration.

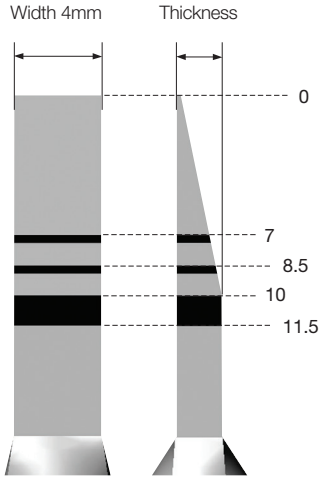

(Unit : mm)

Code	Spec. \ Tip length	7	8.5	10	11.5
ORSS15	Thickness	1.1	1.27	1.5	1.5
	Width	4	4	4	4
ORSS20	Thickness	1.45	1.7	2.0	2.0
	Width	4	4	4	4
ORSS25	Thickness	1.8	2.15	2.5	2.5
	Width	4	4	4	4
ORSS30	Thickness	2.15	2.5	3.0	3.0
	Width	4	4	4	4

Ridge Split KIT- Offset (HRGSPOK)

- Chisel: Instruments for expanding a narrow aleolvar ridge
- Blade holder: When it is difficult to incise bone using a bur in poor bone, malletting can be done by attaching #15 blade
- Components
  - Ridge split chisel : ORSO15, ORSO20, ORSO25,ORSO30
  - Blade holder : ORSBH

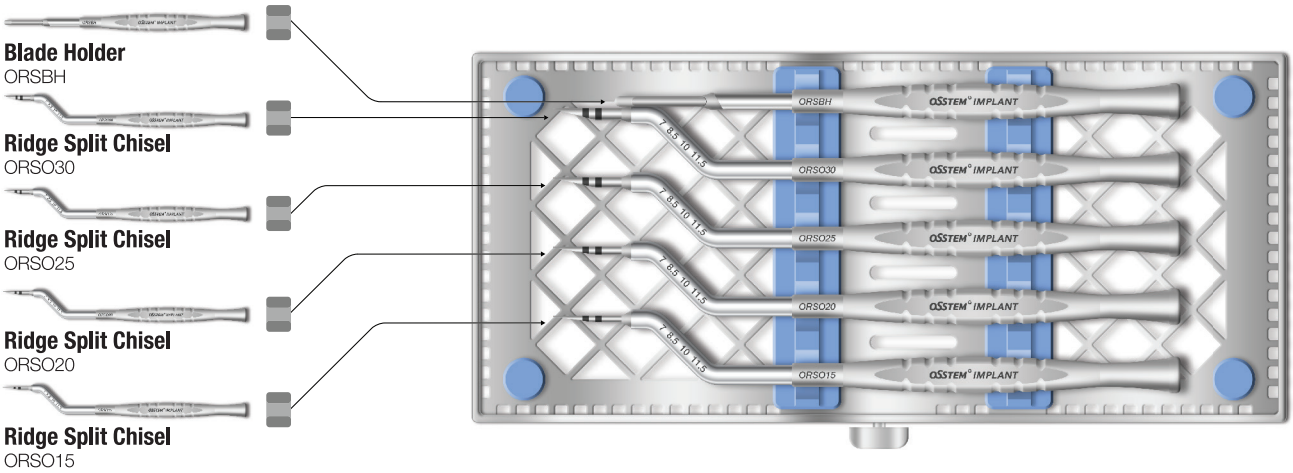

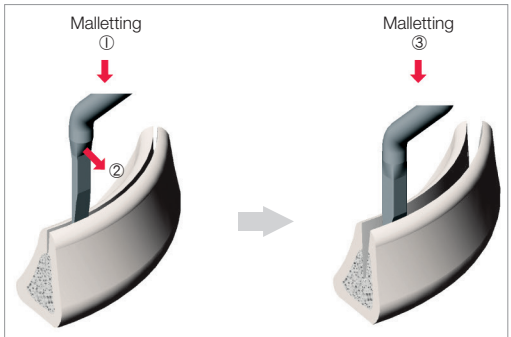

Directions for use : refer to the above illustration.

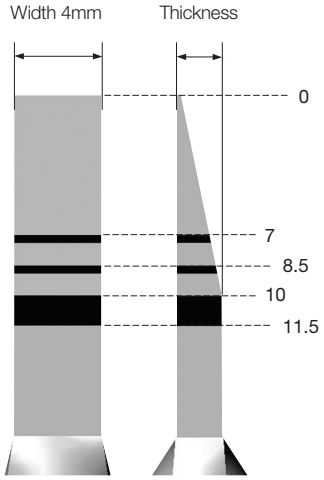

(Unit : mm)

Code	Spec. \ Tip length	7	8.5	10	11.5
ORSO15	Thickness	1.1	1.27	1.5	1.5
	Width	4	4	4	4
ORSO20	Thickness	1.45	1.7	2.0	2.0
	Width	4	4	4	4
ORSO25	Thickness	1.8	2.15	2.5	2.5
	Width	4	4	4	4
ORSO30	Thickness	2.15	2.5	3.0	3.0
	Width	4	4	4	4

www.befrest.com

GBR

SmartBuilder - Titanium

SmartBuilder™

- **SmartBuilder™** is a titanium mesh membrane that provides space maintenance necessary for bone regeneration in alveolar bone defects. Optimized pore sizes provide mechanical strength while still being flexible, prevents shifting or migration of grafting material and allows ideal diffusion of blood and growth factors required for the promotion of healing and bone regeneration.
- **Smart Design** Smooth edges and preformed shaped minimize potential exposure through soft tissue.
- **Smart Coverage** Enhanced space-maintaining properties, providing stable coverage and securing bone material in place.
- **Smart Protection** Rigid shape withstands deformative forces - the membrane does not collapse into the bone graft
- **Smart Application** Optimal preformed shape eliminates the need for additional modifications. No bending or cutting is necessary, and no need for tacks! Conveniently affix the SmartBuilder to a dental implant or to an Anchor Screw
- **Smart Healing** Optimized pore patterns allow for diffusion of fluids and growth factors, while creating a barrier for cell occlusions between soft and hard tissue.

SB1
Papilla Builder

Preformed titanium membrane secures bone grafts to vertically augment alveolar bone up to 1.5mm, restoring papilla height for esthetically sensitive cases.

SB2
Lateral Builder

A semi-dome shaped titanium mesh membrane ideal for simple socket extractions, fenestrations and dehiscence cases that require horizontal and/or vertical bone augmentation of the alveolar ridge.

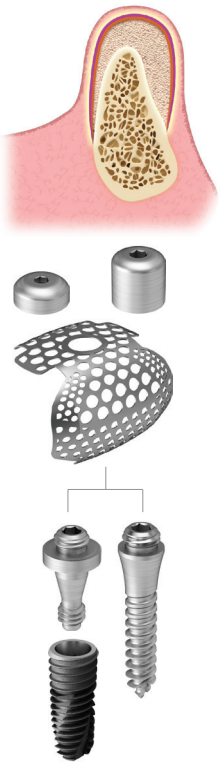

SB3
Jaw Builder

A clamshell shaped titanium mesh membrane secures bone grafts for horizontal and vertical ridge augmentation of up to 5 - 10mm.

P = Proximal
BL = Buccal Length
BD = Buccal Distance
LD = Lingual Distance

SB1 Papilla Builder

P	P	BL	BD	LD	
7mm					
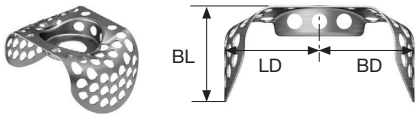	7	3	5	5	SB1P**73A**
	7	5	5	5	SB1P**75A**
10mm					
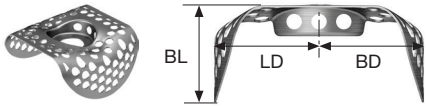	10	3	5.5	5.5	SB1P**103A**
	10	5	5.5	5.5	SB1P**105A**
12mm					
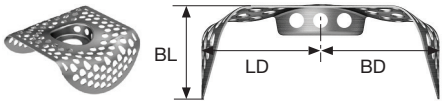	12	3	6.5	6.5	SB1P**123A**
	12	5	6.5	6.5	SB1P**125A**

Scallop shape

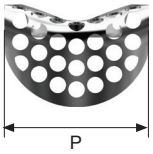

Scallop shape

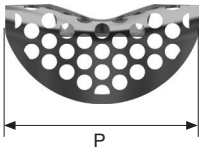

Scallop shape

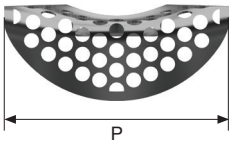

SmartBuilder - Titanium

P = Proximal
BW = Buccal Width
BL = Buccal Length
BD = Buccal Distance

SB2 Lateral Builder

Augmentation

1 Wall

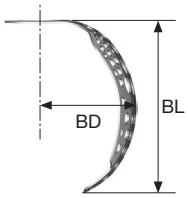

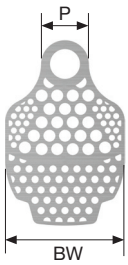

P	BW	BL	BD	
4	8	7	5.5	SM1W**487SB**
4	10	7	5.5	SM1W**4107SB**
4	10	9	5.5	SM1W**4109SB**

2 Wall
Buccal-Proximal

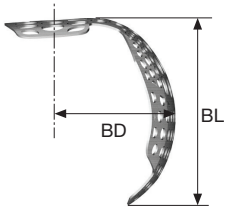

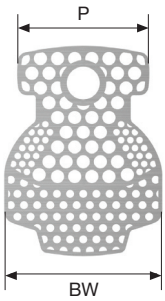

P	BW	BL	BD	
7	9	7	5.5	SM2W**797SB**
7	9	9	5.5	SM2W**799SB**
10	12	7	5.5	SM2W**10127SB**
10	12	9	5.5	SM2W**10129SB**
12	12	7	5.5	SM2W**12127SB**
12	12	9	5.5	SM2W**12129SB**

2 Wall
Buccal-Lingual

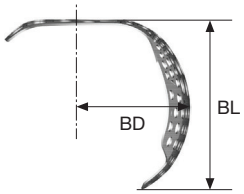

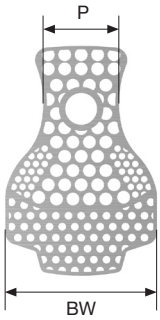

P	BW	BL	BD	
5	9	7	5.5	SM2W**597SE**
5	9	9	5.5	SM2W**599SE**
6	12	7	5.5	SM2W**6127SE**
6	12	9	5.5	SM2W**6129SE**
7	12	7	5.5	SM2W**7127SE**
7	12	9	5.5	SM2W**7129SE**

3 Wall

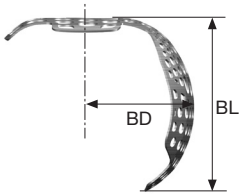

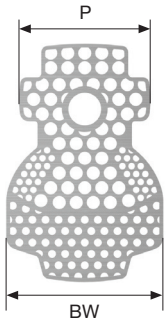

P	BW	BL	BD	
7	9	7	5.5	SM3W**797SB**
7	9	9	5.5	SM3W**799SB**
10	12	7	5.5	SM3W**10127SB**
10	12	9	5.5	SM3W**10129SB**
12	12	7	5.5	SM3W**12127SB**
12	12	9	5.5	SM3W**12129SB**

BW = Buccal Width
BL = Buccal Length
LL = Lingual Length
BD = Buccal Distance
LD = Lingual Distance

SB3 Jaw Builder Available Soon

Augmentation

Horizontal

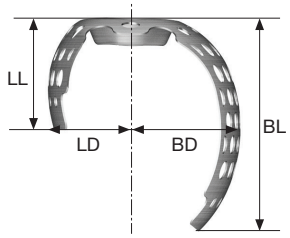

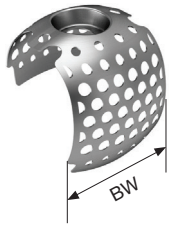

BW	BL	LL	BD	LD	
10	7	3.5	5.5	3.7	SB3H**107B**
10	9	4.5	5.5	3.7	SB3H**109B**
10	11	6	5.5	3.7	SB3H**1011B**

Horizontal

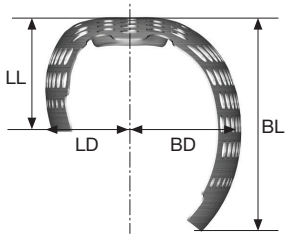

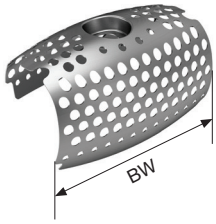

BW	BL	LL	BD	LD	
20	7	3.5	5.5	3.7	SB3H**207B**
20	9	4.5	5.5	3.7	SB3H**209B**
20	11	6	5.5	3.7	SB3H**2011B**

Vertical

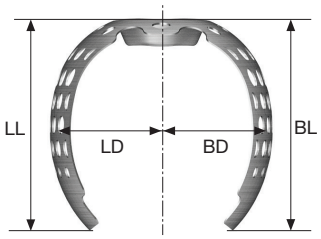

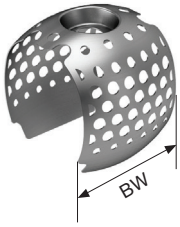

BW	BL	LL	BD	LD	
10	7	7	5.5	5.5	SB3V**107B**
10	9	9	5.5	5.5	SB3V**109B**
10	11	11	5.5	5.5	SB3V**1011B**

Vertical

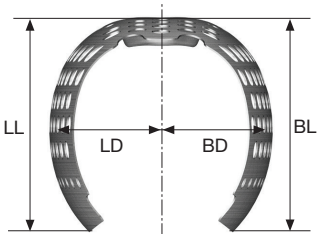

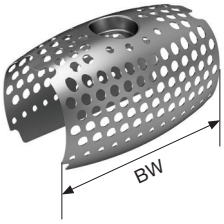

BW	BL	LL	BD	LD	
20	7	7	5.5	5.5	SB3V**207B**
20	9	9	5.5	5.5	SB3V**209B**
20	11	11	5.5	5.5	SB3V**2011B**

SmartBuilder Components

Healing Cap

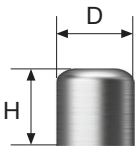

- For non-submerged closure
- Compatible with SB1, SB2 & SB3
  NOTE: 5.0 is not compatible with SB1 or SB3
- Connect using a 1.2 hex hand driver
- Recommended tightening torque: 5~8Ncm

D \ H	3.0	4.0
ø4.0	SMHA**443R**	SMHA**444R**
ø5.0	SMHA**553R**	SMHA**554R**

Cover Cap

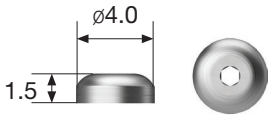

- For submerged closure
- Compatible with SB1, SB2 & SB3
- Connect using a 0.9 hex hand driver
- Recommended tightening torque: 5~8Ncm

D \ H	1.5
ø4.0	SMCC415

SB Anchor for ETIII

- For use with ETIII fixture (shoulder contact)
- Compatible with SB1, SB2 & SB3
- Connect using a 1.2 hex hand driver
- Recommended tightening torque: 12~15Ncm

D \ H	0.5	1.0	1.5	2.0	2.5	3.0
ø3.5	SMHI**305TSM**	SMHI**310TSM**	SMHI**315TSM**	SMHI**320TSM**	SMHI**325TSM**	SMHI**330TSM**
ø4.0	SMHI**405TSR**	SMHI**410TSR**	SMHI**415TSR**	SMHI**420TSR**	SMHI**425TSR**	SMHI**430TSR**

Anchor Screw

Available Soon

- For use without placing an implant
- Compatible with SB1, SB2 & SB3
- Insertion depth: 3~5mm
- Connect using a 1.2 hex hand driver

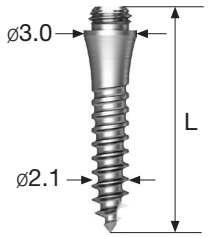

L	8.5	10	11.5	13
	SBS20**08E**	SBS20**10E**	SBS20**11E**	SBS20**13E**

Cover Cap Driver Ejector Set

- Use to screw and unscrew the cover cap
- Friction type driver
- After unscrewing the Cover Cap, use the Cap ejector to release the Cover Cap from the driver
- Packing unit : cap driver + cap ejector

※ For the posterior region, it is recommended to use the Short version

Cover cap driver Cap ejector

Short	Long
SMCD**ESS**	SMCD**ES**

Defect Gauge

- Laser markings at every 1mm
- Thick markings at 4-5mm, 9-10mm, 14-15mm

※ Use the Defect Gauge to measure the bone defect's buccal width, length and distance in order to select the proper SmartBuilder shape and size.

SMDG

AutoBone Collector

AutoBone Collector

- ø5.0 and ø6.0 specifications include drill + stopper set
- Recommended speed : 300 ~ 600rpm
- Can be used up to 50 times before replacement

※ Before drilling, slide the Stopper up the drill until it engages with the first notch.
Commence collecting autogenous bone.
- Stop drilling and pull back when the Stopper reaches the hilt of the drill.

L \ D	Ø5.0	Ø6.0
Short	ABC504S	ABC604S
Long	ABC504L	ABC604L

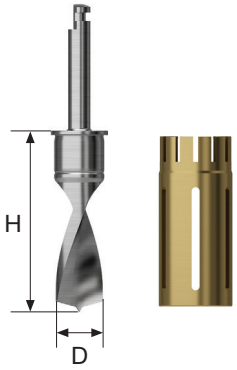

Drill

Stopper

- Prevents over drilling and collects autogenous bone

L \ D	Ø5.0	Ø6.0
Short	ABC2ST504S	ABC2ST604S
Long	ABC2ST504L	ABC2ST604L

Bone Ejector

- Used for dislodging collected bone inside the Stopper
- Can be used with both 5.0 and 6.0 Stoppers

D	Ø5.0 / 6.0
	ABBE52L

Stopper Attachment Guide
-2 Stage Connection System

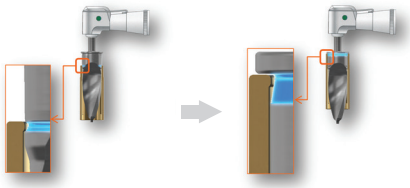

Before drilling, slide the Stopper onto the drill until it engages with the first notch

Stop drilling when the Stopper reaches the hilt of the drill

※ Refer to videos for more detailed instructions

Allogeneic Bone - Powder/Chip

SureOss (FDBA)

- FDBA (Freeze Dried Bone)
- 100% allograft cortical bone
- Superior biocompatibility
- Particle size - powder 200~850㎛
  - chip 850~1000㎛
- Manufacturer: Hansbiomed Co., Ltd. Korea

CC	Powder
0.25	SOP25UH
0.5	SOP50UH
1.0	SOP100UH

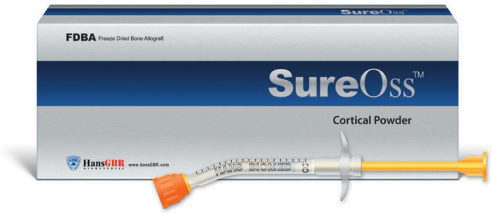

CC	Chip
0.25	SOC25UH
0.5	SOC50UH
1.0	SOC100UH

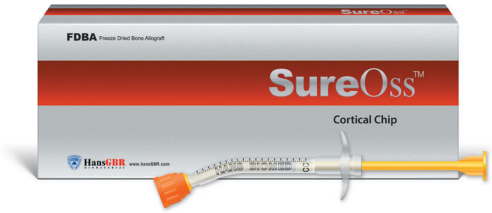

SureOss-D (DFDBA)

- DFDBA (Demineralized Freeze Dried Bone)
- 100% demineralized allograft bone
- Superior biocompatibility
- Particle size - powder 200~850㎛
  - chip 850~1000㎛
- Manufacturer: Hansbiomed Co., Ltd. Korea

CC	Powder
0.25	DSOP25UH
0.5	DSOP50UH
1.0	DSOP100UH

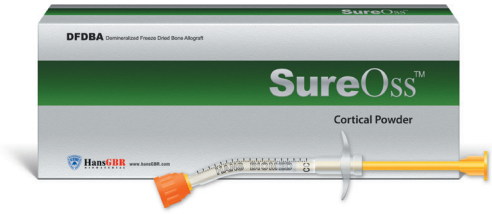

CC	Chip
0.25	DSOC25UH
0.5	DSOC50UH
1.0	DSOC100UH

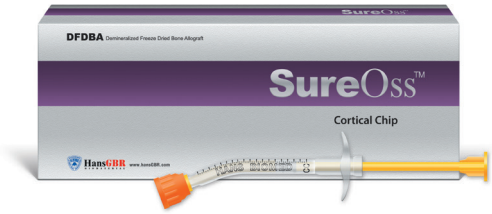

Allogeneic Bone - Powder/Chip

OsteOss (FDBA)

- FDBA
  (Freeze Dried Bone)
- 100% allograft bone
  (cortical + cancellous bone)
- Particle size - powder 200~850㎛
  - chip 850~1000㎛
- Manufacturer: Hansbiomed Co., Ltd.
  Korea

CC	Powder
0.25	CCP 25UH
0.5	CCP 50UH
1.0	CCP 100UH

CC	Chip
0.25	CCC 25UH
0.5	CCC 50UH
1.0	CCC 100UH

Allogeneic Bone - DBM

SureFuse II

- DBM (allograft)
- Bone conduction capabilities
- Can be manipulated to form any shape & size
- Superior biocompatibility
- Manufacturer: Hansbiomed Co., Ltd. Korea

CC	Gel
0.3	SG03UH
0.5	SG03UH
1.0	SG1UH
3.0	SG3UH
5.0	SG5UH

CC	Putty
0.3	SP03UH
0.5	SP03UH
1.0	SP1UH
3.0	SP3UH
5.0	SP5UH

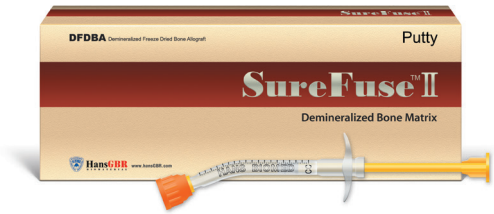

ExFuse II

- DBM (allograft)
- Demineralized allograft + cancellous bone
- Bone conduction capabilities
- Can be manipulated to form any shape & size
- Superior biocompatibility
- Manufacturer: Hansbiomed Co., Ltd. Korea

CC	Gel
0.3	EG03UH
0.5	EG05UH
1.0	EG1UH
3.0	EG3UH
5.0	EG5UH

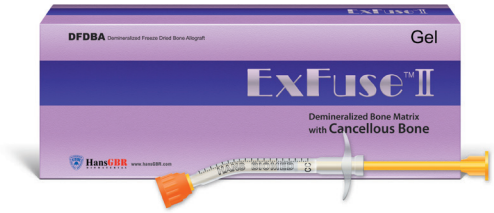

CC	Putty
0.3	EP03UH
0.5	EP05UH
1.0	EP1UH
3.0	EP3UH
5.0	EP5UH

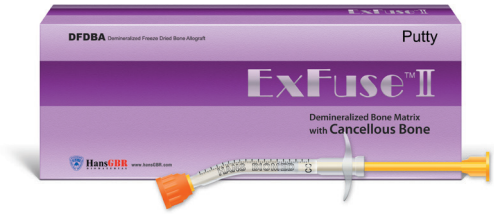

Xenograft

A-Oss Available Soon

- DBB
  (Deproteinized Bovine Bone)
- Osteoconduction capability
- Excellent volume maintenance
- Superior biocompatibility
- Manufacturer:
  Osstem Implant Co., Ltd. Korea

g Particle Size 0.25~1.0mm

0.1 (0.2cc)	BBS**01**
0.25 (0.5cc)	BBS**02**
0.5 (1.0cc)	BBS**05**
1.0 (2.0cc)	BBS**10**
2.0 (4.0cc)	BBS**20**

g Particle Size 1.0~2.0mm

0.1 (0.3cc)	BBL**01**
0.25 (0.75cc)	BBL**02**
0.5 (1.5cc)	BBL**05**
1.0 (3.0cc)	BBL**10**
2.0 (6.0cc)	BBL**20**

Synthetic Bone

Q-Oss Available Soon

- Synthetic bone composed of HA 75% + β -TCP 25%
- Porous structure with interconnected micropores
- Excellent osteoconductivity
- Long-term volume maintenance
- Manufacturer: Osstem Implant Co., Ltd. Korea

g 0.5~1.0mm

0.1 (0.2cc)	BQS01
0.25 (0.4cc)	BQS02
0.5 (0.8cc)	BQS05
1.0 (1.5cc)	BQS10
2.0 (3.0cc)	BQS20

g 1.0~2.0mm

0.1 (0.2cc)	BQL01
0.25 (0.5cc)	BQL02
0.5 (1.0cc)	BQL05
1.0 (2.0cc)	BQL10
2.0 (4.0cc)	BQL20

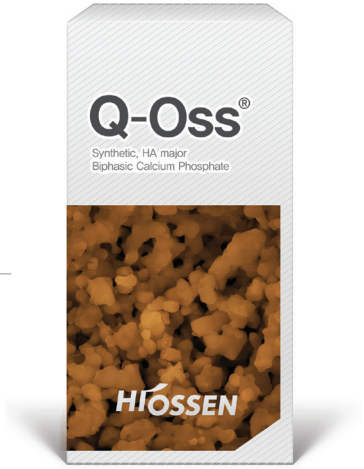

Q-Oss+ Available Soon

- Synthetic bone composed of HA 20% + β -TCP 80%
- Porous structure with interconnected micropores
- Excellent osteoconductivity
- Gradual resorbence
- Manufacturer: Osstem Implant Co., Ltd. Korea

g 0.5~1.0mm

0.1 (0.2cc)	BQ+S01
0.25 (0.4cc)	BQ+S02
0.5 (0.8cc)	BQ+S05
1.0 (1.5cc)	BQ+S10
2.0 (3.0cc)	BQ+S20

g 1.0~2.0mm

0.1 (0.2cc)	BQ+L01
0.25 (0.5cc)	BQ+L02
0.5 (1.0cc)	BQ+L05
1.0 (2.0cc)	BQ+L10
2.0 (4.0cc)	BQ+L20

Bongros

- Synthetic bone
- Carbon-apatite ingredient
- Bone conduction capability
- Manufacturer: CGBio. Korea

g

0.25	HAGM **0.25g**
0.5	HAGM **0.5g**
1.0	HAGL **1.0g**

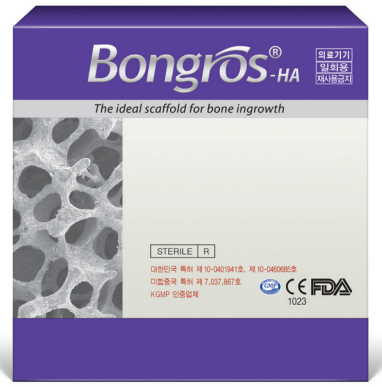

Absorbent Membrane - Collagen

Cytoplast RTM Collagen

- Bovine collagen
- RTM = Resorbable Tissue Matrix
- Longer, predictable resorption time (26 ~ 38 weeks)
- Packing unit : 2ea
- Manufacturer: Osteogenics. USA
- T = Thickness

mm \ T	0.3mm
15 × 20	RTM1520
20 × 30	RTM2030
30 × 40	RTM3040

Absorbent Membrane - Allogeneic Dermal

SureDerm

- Human dermis
  (Allogeneic acellular dermal)
- Reconstructing effect on
  membrane and gingiva
- Freeze drying and rehydration required
- Excellent biocompatibility
- Manufacturer:
  Hansbiomed Co., Ltd. Korea
- T = Thickness

mm \ T 0.25~0.59mm

10 × 20	G102002UH
10 × 40	G102004UH
20 × 20	G102104UH
20 × 40	G102008UH

mm \ T 0.60~0.99mm

10 × 20	G202002UH
10 × 40	G202004UH
20 × 20	G202104UH
20 × 40	G202008UH

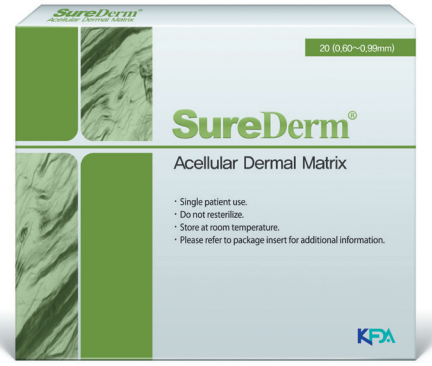

mm \ T 1.00~1.39mm

10 × 20	I302002UH
10 × 40	I302004UH
20 × 20	I302104UH
20 × 40	I302008UH

Impermeable Membrane

Cytoplast TXT-200

- Non resorbable membrane (non resorbable membrane)
- 100% medical grade PTFE
- Minimizes the risk of bacterial infection
  - Membrane pore size 0.3mm
  - Bacteria size 2~5mm
- Superior biocompatibility
- Manufacturer: Osteogenics. USA

mm	TXT-200 Singles
12×20	TXT1220-1

mm	TXT-200
25×30	TXT2530-1

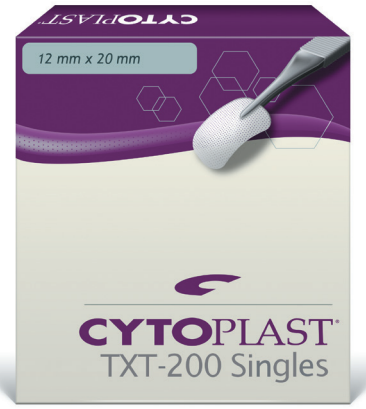

Cytoplast TI-250

- Non resorbable membrane + titanium reinforced
- Increased space retaining capability with titanium reinforcement
- Minimizes the risk of bacterial infection (100% medical grade PTEE material)
  - Membrane pore size 0.3mm
  - Bacteria size 2~5mm
- Superior biocompatibility
- Manufacturer: Osteogenics. USA

mm	Ti-250 Anterior Narrow
12×20	TI250AN-1

mm	Ti-250 Anterior Singles
14×24	TI250AS-1

mm	Ti-250 Posterior Singles
20×25	TI250PS-1

mm	TXT-200 Posterior Large
25×30	TI250PL-1

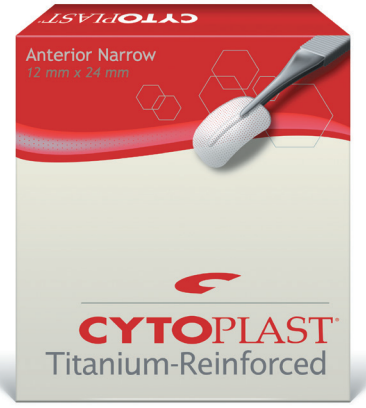

User Manual 2013.02 ver.4.0 "Disposable, re-use prohibited, medical appliance"

Hiossen/Osstem Implant product information

Osstem Implant products are manufactured using medical grade titanium.
Osstem Implant abutments, denture materials and surgical tools are only compatible with Osstem fixtures. For more details about each product, please refer to the user manuals, catalogs, or please visit our corporate website (www.osstem.com). Please check all product labels for product codes, specifications, manufactured dates and expiration dates.

Sterility

Fixtures, cover screws and healing abutments are cleansed and gamma-sterilized. These products are disposable sterile medical appliances and must be used in a sterile field. If the package is damaged or has expired, it must not be used. If the product package has been opened but not used, there is a risk of contamination and it is not recommended that the product be resterilized.

Storage conditions

Store all products in a dry place at room temperature (30oC). Avoid direct sunlight.

General precautions

Dental implant surgery requires formal training and education.

Cautions before dental surgery

A thorough review of the patient health history, oral and radiographic examinations must be completed to determine bone quality and proper treatment planning.

Cautions during dental implant surgery

Osstem Implant System can be placed in a single or two stage dental implant procedure. In order to minimize damage to the patient's tissue, special attention to temperature, surgical lesions and eliminating all sources of contamination and infections are required. Any deviation from the standard surgical protocol increases the risk of failure. When inserting the dental implant, supply sufficient irrigation (with either water or saline) and avoid excessive torque force (greater than 55Ncm). Placing dental implants using a force greater than 300Ncm will result in fracturing the dental implant. Direct pressure to the fixture should be avoided right after surgery. Immediate or delayed loading of the fixture must be determined after a thorough examination of the patient's bone condition and dental implant initial stability.

Dental implants with a diameter less than 4.0mm are not recommended for the posterior region. Wide body dental implants (diameter greater than 5.0mm) are recommended for the posterior region but should not be used with angled abutments. If considering a wide body implant, proper radiographic evaluation must be done to determine the bone quality and potential anatomical restrictions. Wide diameter implants should be performed as a two stage procedure. Sufficient healing period must pass before splinting with another implant or when loading. Immediate loading is not recommended. Short body implants (diameter greater than 5.0mm and shorter than 7mm) are only to be used in the posterior region.

The clinician must thoroughly evaluate the patient's condition and recognize the following: 1) bone loss due to peri-implantitis, 2) changes to the dental implant condition, 3) proper osseointegration determined radiographically. If there is movement or if there is bone loss more than 50%, immediately remove the implant.

Dental implants with a HA coating are prone to cracking or fracturing under high torque, therefore placing in hard bone should be avoid and use less than 35Ncm of force. CA and SOSI coated dental implants are suspended in a solution to prevent the chemically treated surface from reacting to air. After removing the CA or SOSI dental implant, place the implant within 15 minutes to minimize surface degradation.

Warning

Improper patient selection and treatment planning may result in dental implant failure or loss of bone. Osstem Implants must not be used for any other purpose other than what has been prescribed and must not be alter in any shape or form. Implant movement, bone loss or chronic infections can result in implant failure.

Indications

Osstem Implant Systems are designed to replace a patient's tooth or teeth. They can be placed in both the maxillary and submaxillary alveolar bone and after full osseintegration can be restored.
Osstem Implant Systems offer both temporary and final prosthetic components which can be cement or screw retained, overdenture or fixed bridge.

Side effects

There are possible side effects after implant surgery (loss of implant stability, damage to dentures, etc...). These issues can be the result of lack of bone volume or poor bone quality, an infection, patient's poor hygiene, non compliance with post op procedures, improper implant placement, improper restoration.

Contraindications

Patients with the following conditions are not eligible for dental implants:
- Blood clotting or wound healing issues
- Diabetes
- Smoking or drinking excessively
- Compromised immune system due to disease, chemo or radiation therapy
- Chronic oral infection or inflammation due to improper oral hygiene or teeth grinding
- Incurable malocclusion/arthropathia and insufficient arch space

Manufacturer : Osstem Implant Co., Ltd.
203, Geoje-daero, Yeonje-gu, Busan, Korea
TEL 82-51-850-2500 **FAX** 82-51-861-4693

EC REP
DEUTSCHE OSSTEM GmbH.
Mergenthalerallee 25
65760 Eschborn, Germany
+49-(0)6196-777-550

0434

STERILE R — Sterilized using irradiation

Use by

Manufacture

Do not reuse

Date of manufacture

Keep away from sunlight

REF — Catalogue number

NON STERILE — Non-Sterile

Keep dry

LOT — Batch code

STERILIZE — Do not resterilize

Caution, Consult accompanying documents

Storage condition
Dry place at room temperature

Rx only
For USA only : Federal law restricts this device to sale by or on the order of a dentist

How to Maintain Surgical KITS

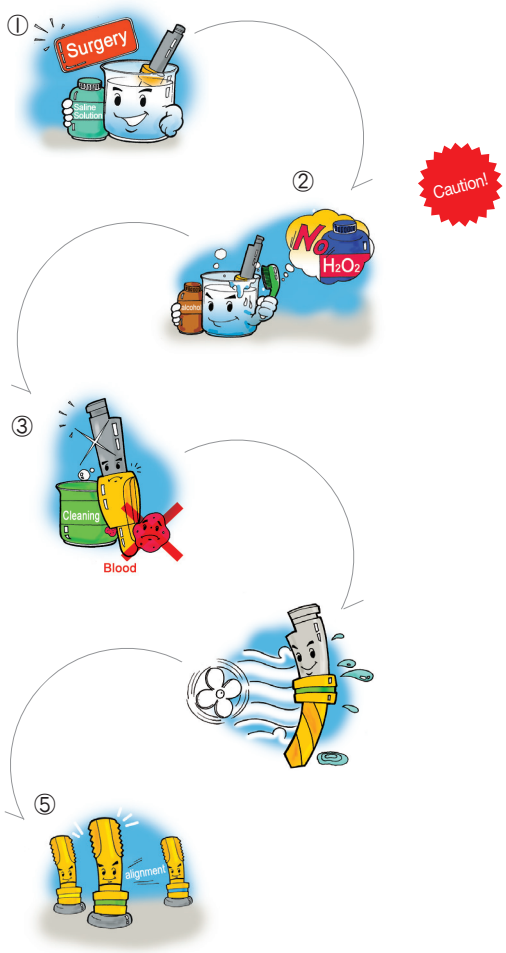

① During the surgery, be sure to keep the used tools in saline or distilled water.

② After the surgery, wash all tools used during surgery in alcohol.
Caution : Do NOT use hydrogen peroxide.
Exposure to hydrogen peroxide may cause discoloration of the laser marking and/or TiN coating.

③ Wash the tool with distilled water or under running water until all blood stains and/or foreign objects are removed.

④ Remove moisture completely with dry cloth or a warm fan.

⑤ Place the dried tools inside the Kit case.
(Refer to the color-coding for easy placement.)

⑥ After drying the Kit in the Autoclave for 15 minutes at 132℃, store the Kit at room temperature.

Precautions

Separate, wash and store all tools used immediately after the surgery.
It is advised to disinfect the Hiossen Surgical KIT again prior to the surgery (at 132℃ for 15 minutes).
Although the Hiossen Surgical KIT is covered under the product warranty for one year after opening the Kit, all drills and drivers may be used up to 50 times only.

www.befrest.com

HIOSSEN

0434

И М22