History of the development of Osstem Implant

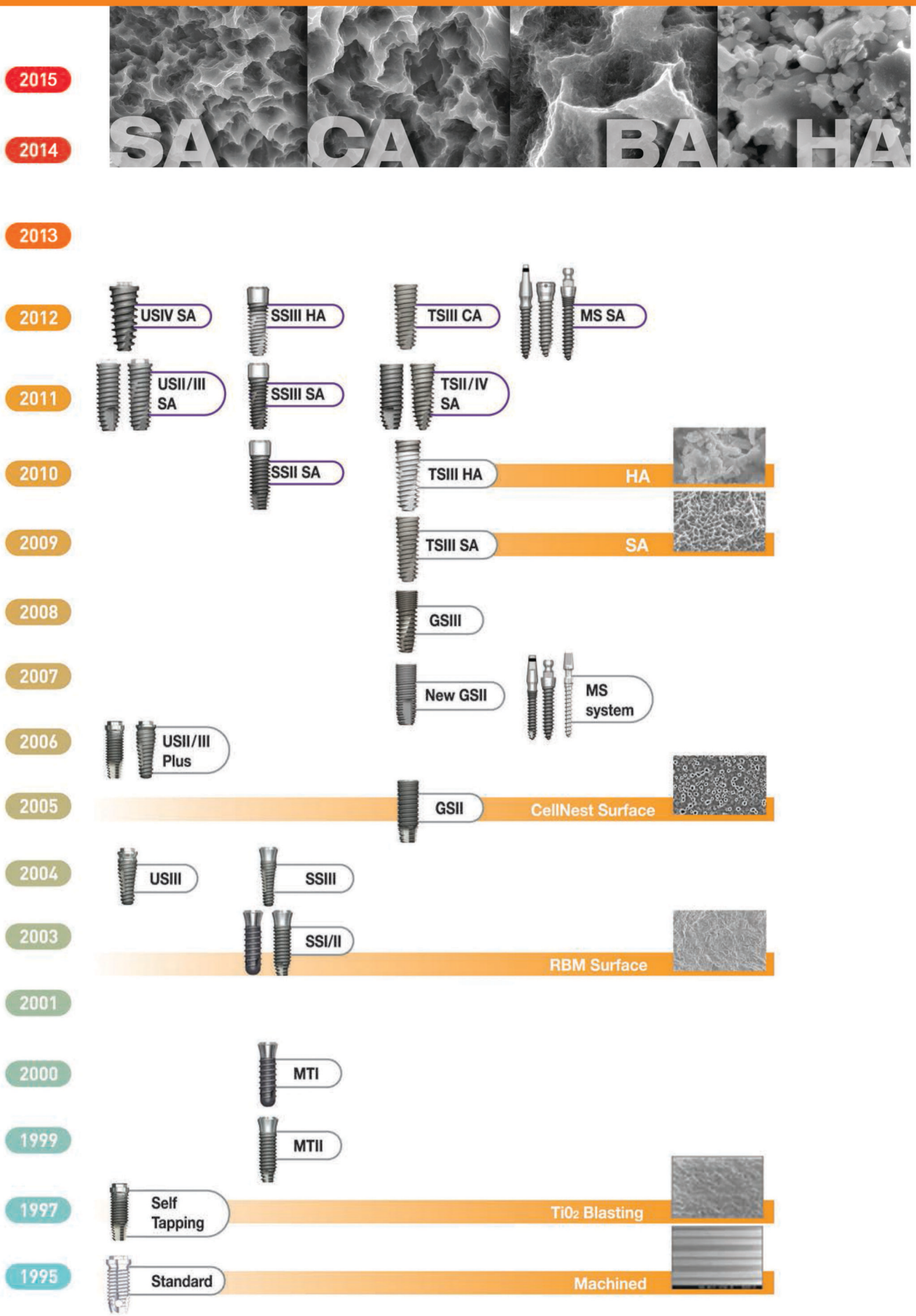

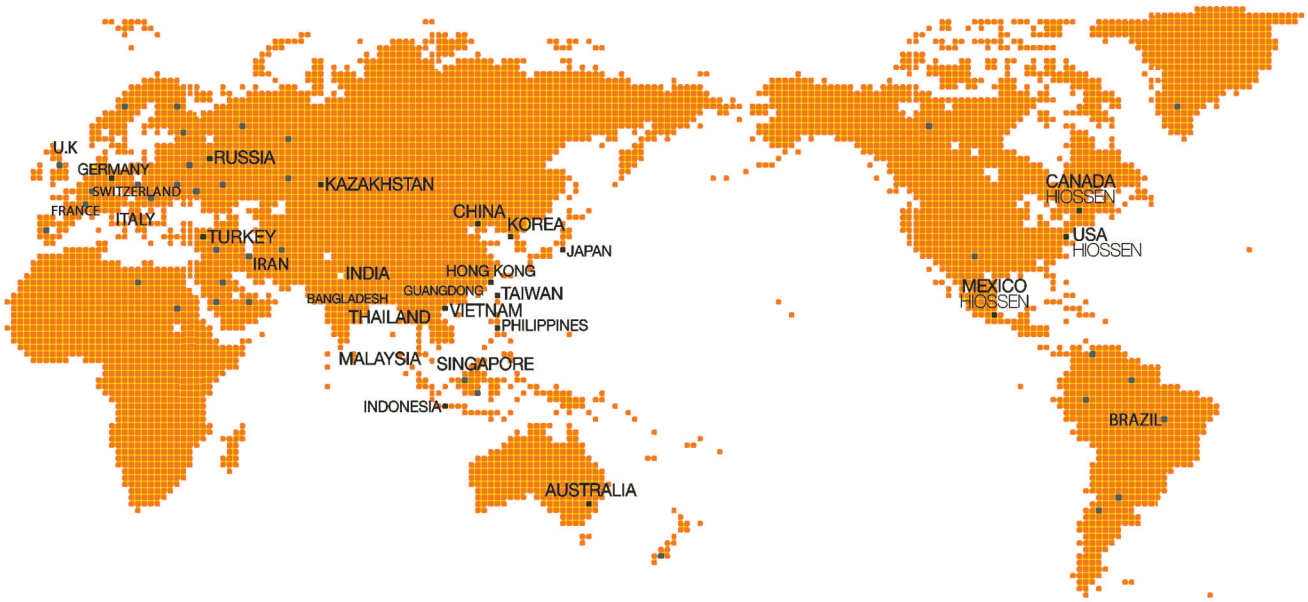

1992

Initiates the development of dental implant system

1995

Develops dental implants and acquires industrial license

1996

Changed company name to Osstem Implant Co., Ltd.

Obtained GOST-R certification in Russia

Established the first incorporation stage of overseas subsidiaries in 12 countries

1997

OSSTEM Co., Ltd. Founded

Launched "Doobunae" (health insurance claiming software)

2000

Launched "Hanaro" (dentistry management software)

Acquired Korean company Sumin Comprehensive Dental Materials

2001

Obtained CE-0434 certification

Established AIC Training Center

2002

Established Osstem Implant Research Center

Obtained US FDA certification

Launched USII implant

Launched SSII implant

2007

Listed on KOSDAQ stock exchange and began trading

Obtained GOST-R certification in Russia

Selected next-generation products

Obtained certification from Australia's Therapeutic Goods Administration

2008

Established Osstem's osteology research center

Selected as a National Strategic Leading Technology Company

2009

Obtained permission from Japan's Ministry of Health, Labor, and Welfare to produce and sell medical devices

2010

Launched TSIII SA implant

Launched TSIII HA implant

Selected as WPM Biomedical National Policy Company

Exceeded 10,000 dentistry software members

2011

Selected Osstem Implant Research Center as an ATC (Superior Technology Research Center)

Selected as a world champion business

Obtained Health Canada certification

Launched K2 unit chair

Selected as "Global First-Class Product"

2012

Launched TSIII CA implant

Established Osstem Medical Equipment Research Center

2013

Launched Osstem's xenograft "A-Oss"

Launched K3 unit chair

Selected as a hidden champion business

2014

Selected as a Worlc 300 business

Osstem Surface

SEM (Scanning Electron Microscope) image

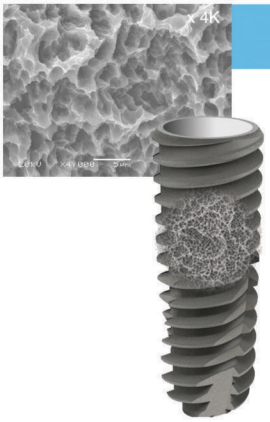

OSSTEM SA Surface

SA Surface

- **Provides optimum surface through acid treatment**
  - Provides Ra 2.5~3.0㎛ surface roughness However, upper section 0.5mm area is Ra 0.5~0.6㎛
  - Achieved uniform micro-pit 1.3㎛ in size
  - 46% greater surface area compared to RBM

- **Bone reaction performance (in-vitro and in-vivo)**
  - 20% improvement in osteoblast separation and ossification compared to RBM
  - Initial bone reaction performance in animal model (mini-pig)
    - 48% improvement in initial stability (RT, 4 weeks) compared to RBM
    - 20% improvement in ossification (BIC, 4 weeks) compared to RBM

SEM Image and Optical Surface Profile

OSSTEM HA Surface

HA Surface

- **Premium surface coated with high crystalline HA**
  - High crystalline HA coating 30~60㎛ in thickness
  - HA coating on RBM surface (Ra 3.0~3.5㎛)
  - Achieved at least 98% HA high crystallization
  - Solves problem of interbody fusion in low crystalline HA

- **Bone reaction performance (in-vitro and in-vivo)**
  - Excellent biocompatibility in HA that is similar to bone
  - 2x improvement in osteoblast ossification (5 days) compared to SA
  - 40% improvement in initial stability (RT, 4 weeks) in animal models compared to SA
  - Suitable for weak bone tissue, or tooth extraction or implant insertion

OSSTEM CA Surface

CA Surface

- **Superhydrophilic SA surface encapsulated in calcium solution**
  - Maintains optimum surface identical to SA surface
  - Surface activity maximized after encapsulated in calcium ($CaCl_2$) solution
  - Increased ossification surface area through excellent blood wettability
  - Improved bone reaction performance in the early osseointegration stage compared to SA surface

- **Bone reaction performance (in-vitro and in-vivo)**
  - 3x increase in protein, cell adhesion compared to SA
  - 19% increase in initial cell separation (7 days) compared to SA
  - 34% improvement in initial stability (RT, 2 weeks) compared to SA
  - 26% improvement in ossification (BIC, 2 weeks) compared to SA

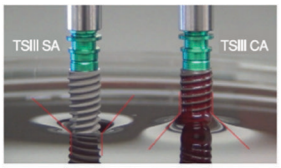

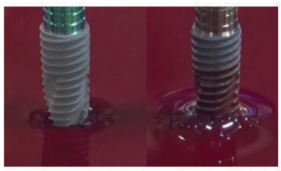

<Blood Wettability Test>

TSIII SA Implant Overview

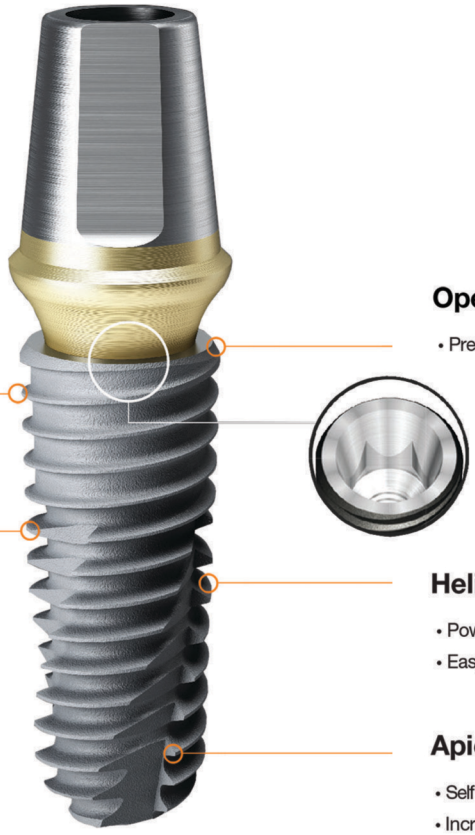

Single Pitch Micro Thread

- 0.8pitch x 0.25depth x double lead
- Synchronized thread
- Optimized design for SA surface
- Reinforce fixture strength

Corkscrew Thread

- 0.8pitch x 0.5depth x double lead
- Powerful self threading
- Keep implant path
- Easy to change the path
- High initial stability
- Decrease sensitivity on drill size

Open Thread

- Prevents bone necrosis

Helix Cutting Edge

- Powerful self threading
- Easy path change

Apical design

- Self drilling ability
- Increased initial stability at fresh extraction socket

TSIII SA Fixture

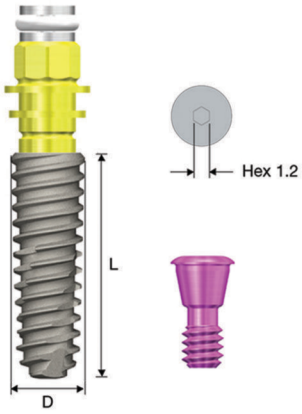

Fixture 3.5

Pre Mount

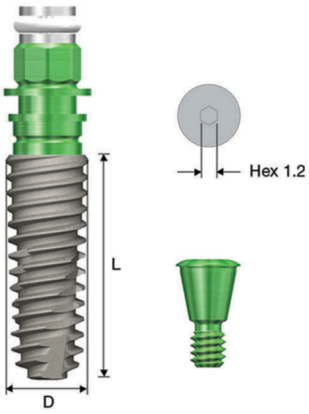

Fixture 4.0/4.5/5.0

TSIII SA Ultra Wide® Fixture

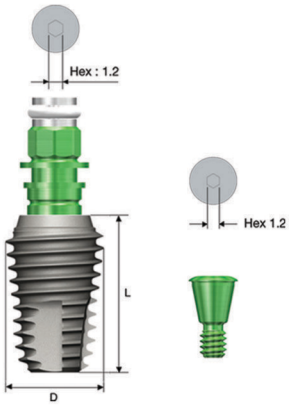

Fixture 6.0/7.0

No Mount

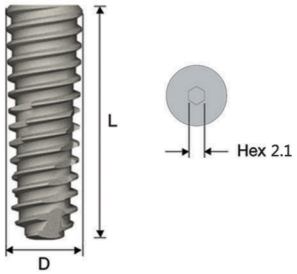

Fixture 3.5

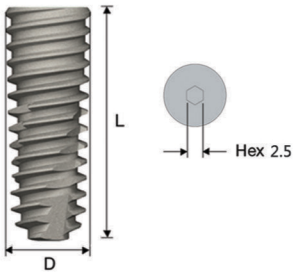

Fixture 4.0/4.5/5.0

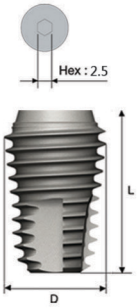

Fixture 6.0/7.0

TSIII SA Fixture

- Submerged type implant with an internal hex 11° taper connection structure
- Optimum screw thread design for SA surface to achieve consistent roughness
- Taper body design with superior initial stability
- Highest initial stability in soft bone by using upper-section thread and body design
- Powerful self-threading effect using corkscrew thread
- Acquires the initial stability needed in immediate loading even in soft bone

Ultra-wide

- In implant cases for posterior tooth extraction and immediate insertion and replacing a failed implant
- With its optimized apex design, capable of extracting a tooth and obtaining initial stability predictably even at the bottom 3mm
- Recommended insertion torque: 40Ncm or more

※ For a single posterior implant case, use of fixture at least 4.5mm in diameter is recommended

NoMount fixture order code
: fixture product code (ex : TS3S4010S)
Pre-Mounted fixture order code (fixture + mount + cover screw)
: **B** + fixture product code (ex : **B**TS3S4010S)

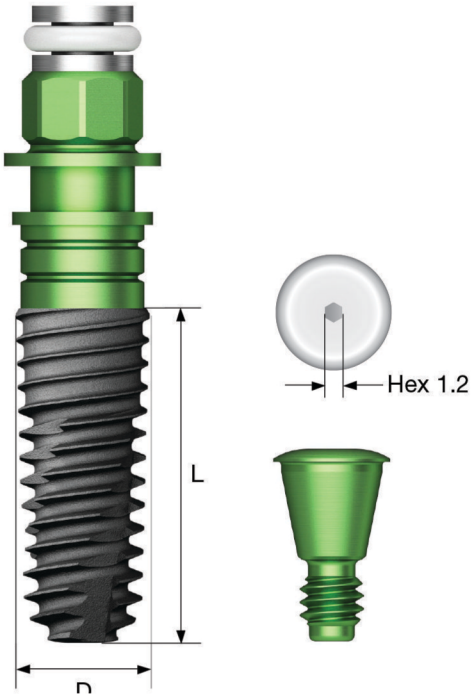

TSIII HA Fixture

- Submerged type implant with an internal hex 11° taper connection structure
- Premium surface coated with high crystalline HA
- Taper body design with superior initial stability
- Highest initial stability in soft bone by using upper-section small thread
- Powerful self-threading effect using corkscrew thread
- Achieves high initial stability needed in immediate loading even in soft bone
- Recommended insertion torque: 35Ncm or lower

※ For a single posterior implant case, use of fixture at least 4.5mm in diameter is recommended

※ HA fixture usage not recommended due to possibility of coating layer cracks in hard bone and disbonding

Pre-Mounted fixture order code (fixture + mount + cover screw)
: **B** + fixture product code (ex : **B**TS3S4010H)

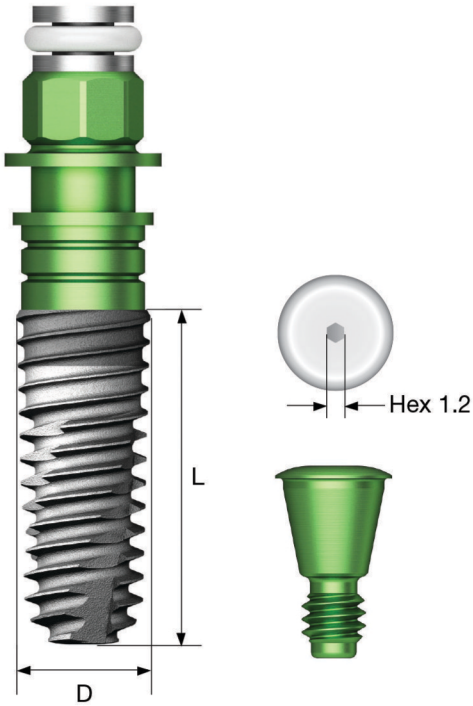

TSIII SA Fixture

D ø3.0
Hex 2.1
Narrow
M

L	8.5	10	11.5	13
	TS3M3008S	TS3M3010S	TS3M3011S	TS3M3013S

D ø3.5
Hex 2.1
M

L	8.5	10	11.5	13
	TS3M3508S	TS3M3510S	TS3M3511S	TS3M3513S

D ø4.0
Hex 2.5
R

L	7	8.5	10	11.5	13
	TS3S4007S	TS3S4008S	TS3S4010S	TS3S4011S	TS3S4013S

D ø4.5
Hex 2.5
R

L	7	8.5	10	11.5	13
	TS3S4507S	TS3S4508S	TS3S4510S	TS3S4511S	TS3S4513S

D ø5.0
Hex 2.5
R

L	6	6	7	8.5	10	11.5	13
	Extra short	Short					
	TS3S5005S	TS3S5006S	TS3S5007S	TS3S5008S	TS3S5010S	TS3S5011S	TS3S5013S

Ultra-Wide

D ø6.0
Hex 2.5
R

L	6	7	8.5	10	11.5	13
	Short					
	TS3S6006S	TS3S6007S	TS3S6008S	TS3S6010S	TS3S6011S	TS3S6013S

D ø7.0
Hex 2.5
R

L	6	7	8.5	10	11.5	13
	Short					
	TS3S7006S	TS3S7007S	TS3S7008S	TS3S7010S	TS3S7011S	TS3S7013S

TSIII CA Fixture

- Submerged type implant with an internal hex 11° taper connection structure
- Superior hydrophilic SA surface encapsulated in calcium solution
- Taper body design with superior initial stability
- Highest initial stability in soft bone by using upper-section thread and body design
- Powerful self-threading effect using corkscrew thread
- Achieves high initial stability needed in immediate loading even in soft bone

Ultra-wide

- In implant cases for posterior tooth extraction and immediate insertion and replacing a failed implant
- With its optimized apex design, capable of extracting a tooth and obtaining initial stability predictably even at the bottom 3mm
- Recommended insertion torque: 40Ncm or more

※ For a single posterior implant case, use of fixture at least 4.5mm in diameter is recommended

NoMount fixture order code
: fixture product code (ex : TS3S4010C)
Pre-Mounted fixture order code (fixture + mount + cover screw)
: **B** + fixture product code (ex : **B**TS3S4010C)

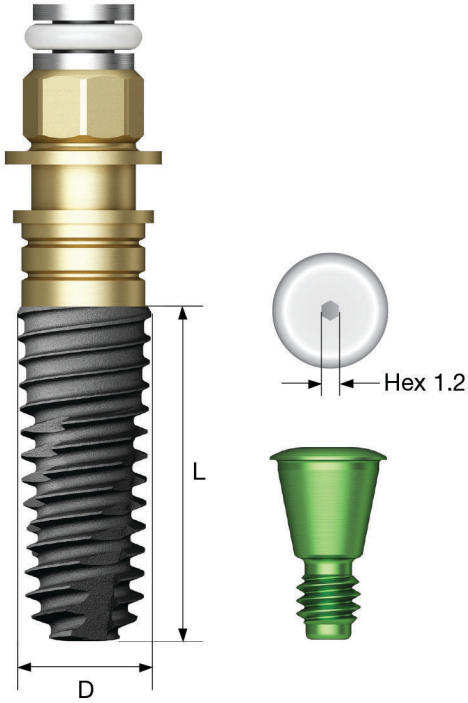

TSIV SA Fixture

- Submerged type implant with an internal hex 11° taper connection structure
- Optimum screw thread design for SA surface
- Fixture for use only in maxillary sinus and soft bone
- Highest initial stability in soft bone by using more tapered body shape and deeper thread pitch
- Powerful self-threading effect using corkscrew thread
- Due to sharp apex design, even after D4 bone ø 2.0, ø 3.0mm drilling implant insertion is possible

Ultra-wide

- In implant cases for posterior tooth extraction and immediate insertion and replacing a failed implant
- With its optimized apex design, capable of extracting a tooth and obtaining initial stability predictably even at the bottom 3mm
- Recommended insertion torque: 40Ncm or more

※ For a single posterior implant case, use of fixture at least 4.5mm in diameter is recommended

※ TSIV fixture insertion is recommended at 15rpm or lower due to large thread pitch and higher insertion speed (or bone expansion feature)

NoMount fixture order code
: fixture product code (ex : TS4S4010S)
Pre-Mounted fixture order code (fixture + mount + cover screw)
: **B** + fixture product code (ex : **B**TS4S4010S)

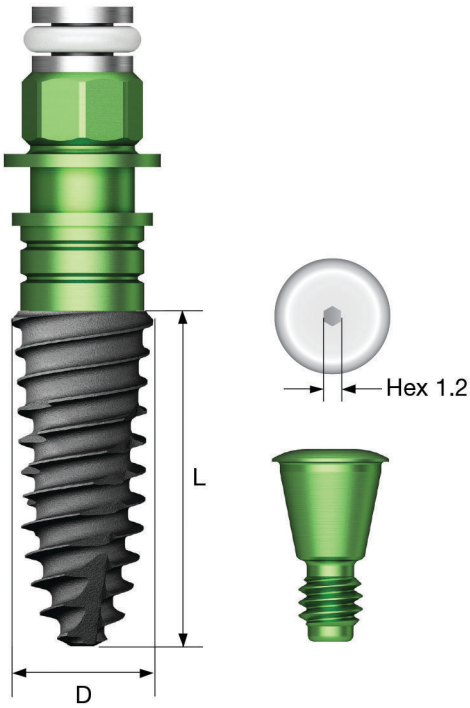

TSIV SA Fixture

D Ø4.0 Pitch 0.8
Hex 2.5

R

L	7	8.5	10	11.5	13
	TS4S4007S	TS4S4008S	TS4S4010S	TS4S4011S	TS4S4013S

D Ø4.5 Pitch 1.0
Hex 2.5

R

L	7	8.5	10	11.5	13
	TS4S4507S	TS4S4508S	TS4S4510S	TS4S4511S	TS4S4513S

D Ø5.0 Pitch 1.2
Hex 2.5

R

L	7	8.5	10	11.5	13
	TS4S5007S	TS4S5008S	TS4S5010S	TS4S5011S	TS4S5013S

Ultra-wide

D Ø6.0
Hex 2.5

R

L	7	8.5	10	11.5	13
	TS4S6007S	TS4S6008S	TS4S6010S	TS4S6011S	TS4S6013S

D Ø7.0
Hex 2.5

R

L	7	8.5	10	11.5	13
	TS4S7007S	TS4S7008S	TS4S7010S	TS4S7011S	TS4S7013S

TS System

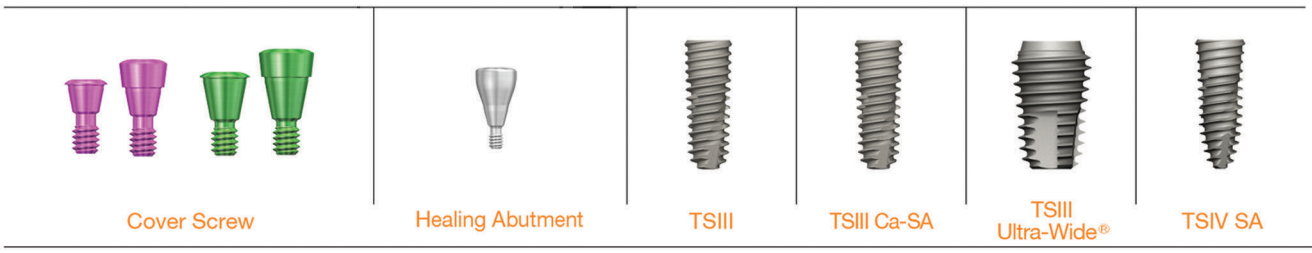
Cover Screw
Healing Abutment
TSIII
TSIII Ca-SA
TSIII Ultra-Wide®
TSIV SA


Type
Abutment
Protect Cap
Retraction Cap
Impression Coping
Lab Analog
Burn-out Cylinder
Etc
Rigid
(4.0 mm) (5.5mm) (7.0 mm)
(4.0 mm) (5.5 mm) (7.0 mm)
Single
Bridge
Finising Reamer
Transfer
(Hex) (Non-Hex)
Temporary Abutment
Bite Index
Angled
(A type) (B type) 30°
(Hex) (Non-Hex)
ZioCera/ ZioCera Angled
(Hex) (Non-Hex)
GoldCast/ NP-CAST
(Hex) (Non-Hex)
(Hex) (Non-Hex)
Pick-up
(Hex) (Non-Hex)
Transfer
(Hex) (Non-Hex)
CustomFit
FreeForm ST
(Hex) (Non-Hex)
Convertible
Pick-up
Cylinder
Polishing Protect Cap
Stud
O-rings System
Dalbo System
OSSTEM
Locator®
Extended Replacement Male
Core Tool
Torque Driver

Prosthetic Flow Diagrams for TS System

Cement Retained Restoration : Transfer, Angled, ZioCera, ZioCera Angled, GoldCast, NP-CAST, FreeForm ST
Screw Retained Restoration : ZioCera, ZioCera Angled, GoldCast, Temporary, Quick Temporary, NP-CAST • Mini, Regular

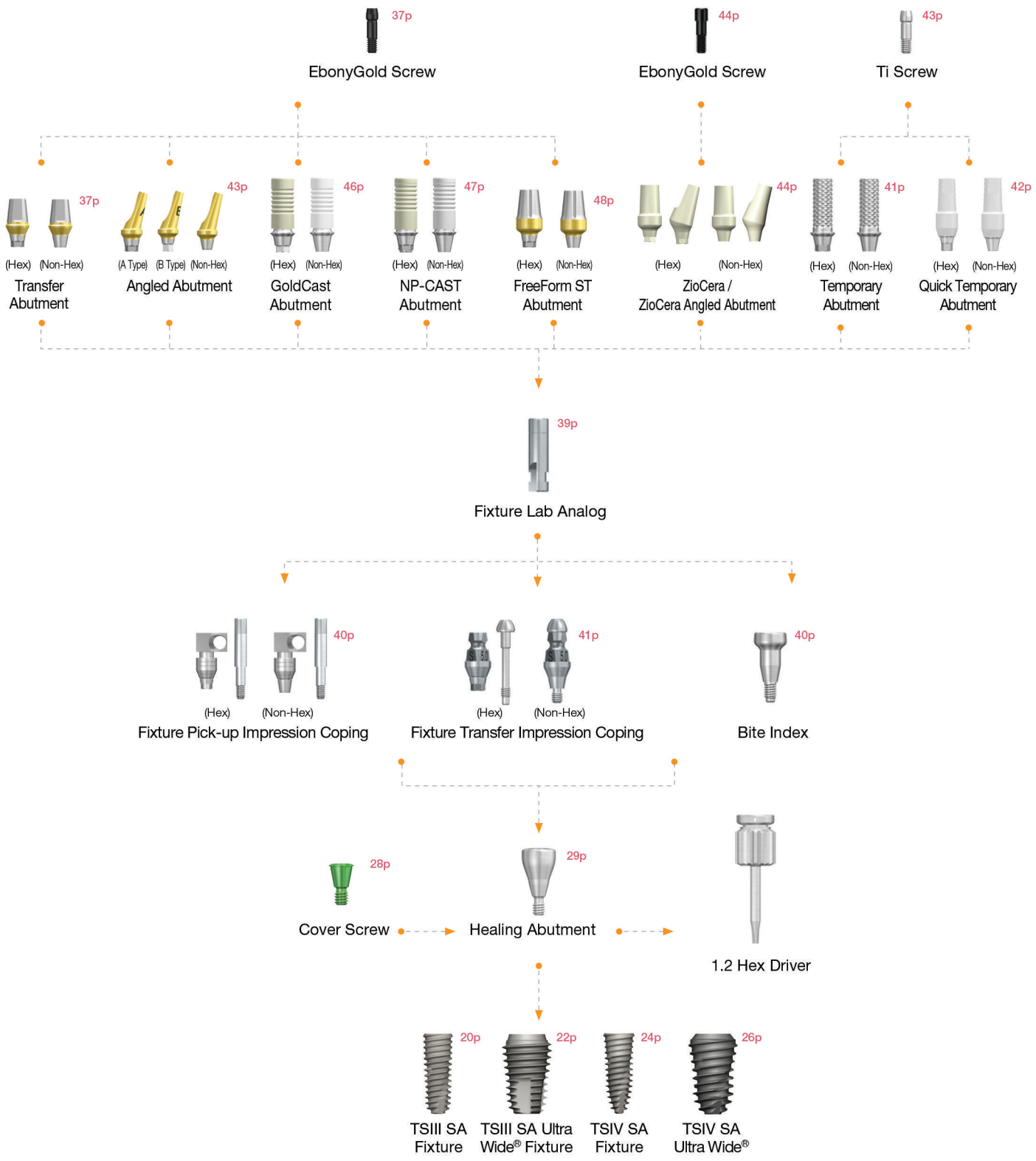

ø 3.5 Fixture (Length : 10mm)

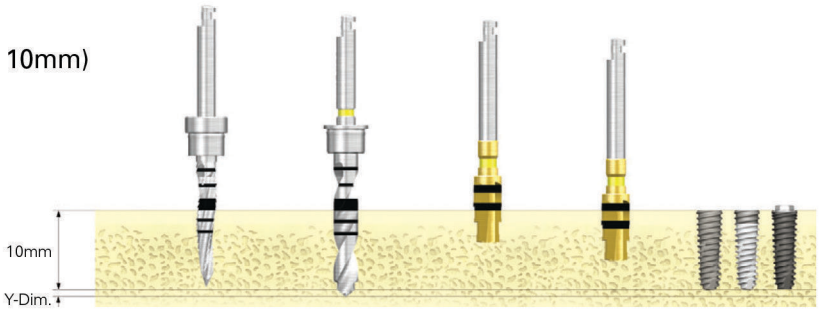

Bone quality	Guide Drill	ø 2.2/3.0	F3.5 Cortical drill - 하단 Line	F3.5 Cortical drill - 상단 Line	ø 3.5 Fixture
Soft	▶	▶			Implant placement
Normal	▶	▶	▶		
Hard	▶	▶		▶	

ø 4.0 Fixture (Length : 10mm)

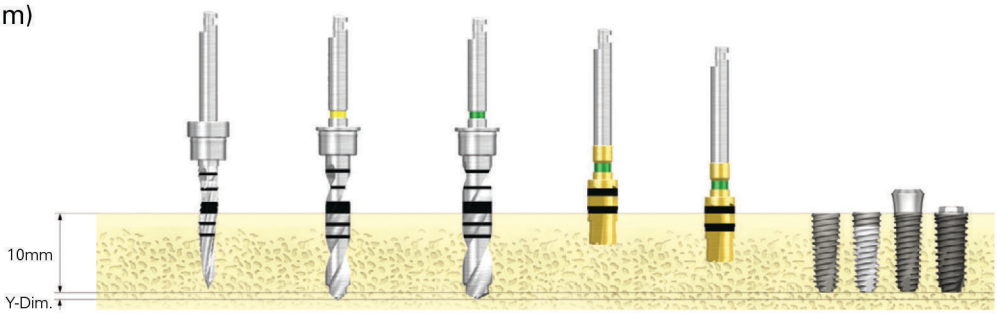

Bone quality	Guide Drill	ø 2.2/3.0	ø 3.0/3.6	F4.0 Cortical drill - 하단 Line	F4.0 Cortical drill - 상단 Line	ø 4.0 Fixture
Soft	▶	▶				Implant placement
Normal	▶	▶	▶	▶		
Hard	▶	▶	▶		▶	

ø 4.5 Fixture (Length : 10mm)

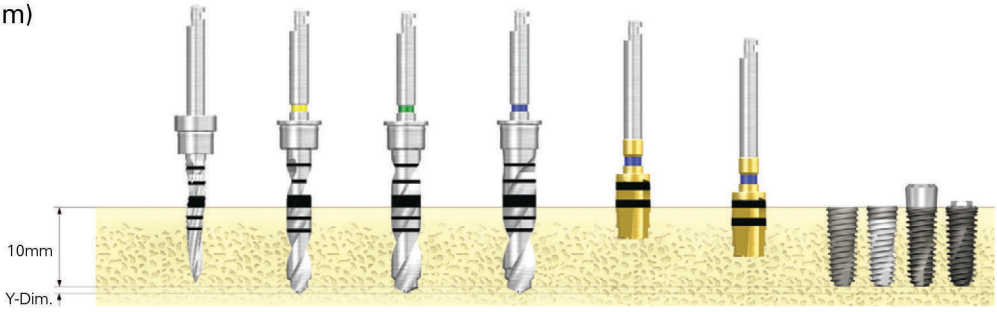

Bone quality	Guide Drill	ø 2.2/3.0	ø 3.0/3.6	ø 3.0/3.6/4.1	F4.5 Cortical drill - 하단 Line	F4.5 Cortical drill - 상단 Line	ø 4.5 Fixture
Soft	▶		▶				Implant placement
Normal	▶	▶		▶	▶		
Hard	▶	▶		▶		▶	

ø 5.0 Fixture (Length : 10mm)

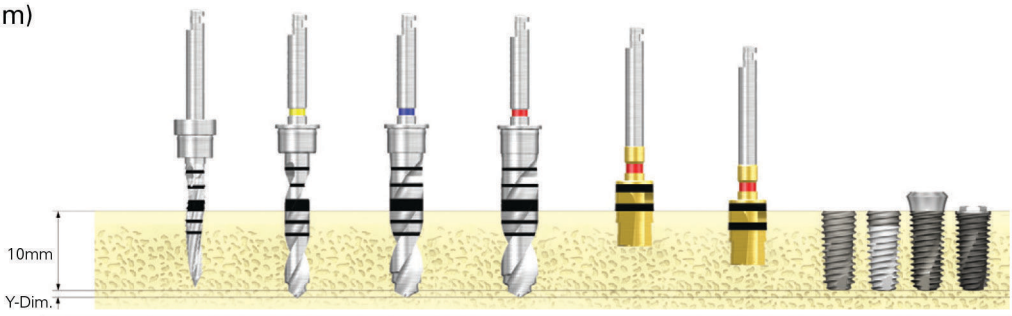

Bone quality	Guide Drill	ø 2.2/3.0	ø 3.0/3.6/4.1	ø 3.0/4.1/4.6	F5.0 Cortical drill - 하단 Line	F5.0 Cortical drill - 상단 Line	ø 5.0 Fixture
Soft	▶						Implant placement
Normal	▶						
Hard	▶						

Healing Abutment

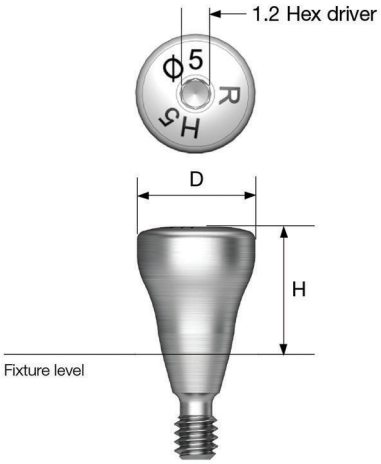

- Hex driver : 1.2
- Tightening torque : 5~8Ncm

M Mini

R Regular

Matching table

Healing Abutment	**H**	3.0	4.0	5.0	7.0
Abutment	**G/H**	1.0	2.0 or 3.0	3.0 or 4.0	5.0 이상
Impression coping	**Type**	Short	Short	Long	Long

D \ H	3.0	4.0	5.0	7.0	9.0
					
Ø4.0	TSHA403M	TSHA404M	TSHA405M	TSHA407M	TSHA409M
Ø4.5	TSHA453M	TSHA454M	TSHA455M	TSHA457M	TSHA459M

D \ H	3.0	4.0	5.0	7.0	9.0
					
Ø4.0	TSHA403R	TSHA404R	TSHA405R	TSHA407R	TSHA409R
Ø4.5	TSHA453R	TSHA454R	TSHA455R	TSHA457R	TSHA459R
Ø5.0	TSHA503R	TSHA504R	TSHA505R	TSHA507R	TSHA509R
Ø6.0	TSHA603R	TSHA604R	TSHA605R	TSHA607R	TSHA609R
Ø7.0	TSHA703R	TSHA704R	TSHA705R	TSHA707R	TSHA709R
Ø8.0	-	-	TSHA805R	-	-

Transfer Abutment Components

Fixture Lab Analog

- Achieves fixture in oral cavity on a working model

M Mini

R Regular

M For Ø3.0

GSTLA300

M

GSTLA350

R

GSTLA400

Transfer Abutment Components

Fixture Pick-up Impression Coping

- Takes impression using open tray technique
- Superior impression stability with an extended flag with a hole
- 1.2 hex driver
- * Label is basic packaging specification
- Packing unit : Impression coping body + guide pin

M Mini

R Regular

D \ L	11		Guide Pin 0	Guide Pin 5.0	Guide Pin 9.0
Type	Hex	Non-Hex			
					
Ø 4.0	GSPIM4011	GSPIM4011N	GSPGPM100	GSPGPM150*	GSPGPM150L
Ø 4.5	GSPIM4511	GSPIM4511N			
Ø 4.0	GSPIS4011	GSPIS4011N	GSPGPR100	GSPGPR150*	GSPGPR150L
Ø 4.5	GSPIS4511	GSPIS4511N			
Ø 5.0	GSPIS5011	GSPIS5011N			
Ø 6.0	GSPIS6011	GSPIS6011N			
Ø 7.0	GSPIS7011	GSPIS7011N			

D \ L	15		Guide Pin 0	Guide Pin 5.0	Guide Pin 9.0
Type	Hex	Non-Hex			
					
Ø 4.0	GSPIM4015	GSPIM4015N	GSPGPM100L	GSPGPM150L*	GSPGPM200L
Ø 4.5	GSPIM4515	GSPIM4515N			
Ø 4.0	GSPIS4015	GSPIS4015N	GSPGPR100L	GSPGPR150L*	GSPGPR200L
Ø 4.5	GSPIS4515	GSPIS4515N			
Ø 5.0	GSPIS5015	GSPIS5015N			
Ø 6.0	GSPIS6015	GSPIS6015N			
Ø 7.0	GSPIS7015	GSPIS7015N			

Fixture Transfer Impression Coping

D \ L	11		14	
Type	Hex	Non-Hex	Hex	Non-Hex
				
Ø 4.0	GSTIM4011	GSTIM4011N	GSTIM4014	GSTIM4014N
Ø 4.5	GSTIM4511	GSTIM4511N	GSTIM4514	GSTIM4514N
Ø 4.0	GSTIS4011	GSTIS4011N	GSTIS4014	GSTIS4014N
Ø 4.5	GSTIS4511	GSTIS4511N	GSTIS4514	GSTIS4514N
Ø 5.0	GSTIS5011	GSTIS5011N	GSTIS5014	GSTIS5014N
Ø 6.0	GSTIS6011	GSTIS6011N	GSTIS6014	GSTIS6014N
Ø 7.0	GSTIS7011	GSTIS7011N	GSTIS7014	GSTIS7014N

PROSTHETIC FLOW DIAGRAM 2

Transfer / Angled / FreeForm ST / GoldCast / NP-Cast

Fixture Level Impression

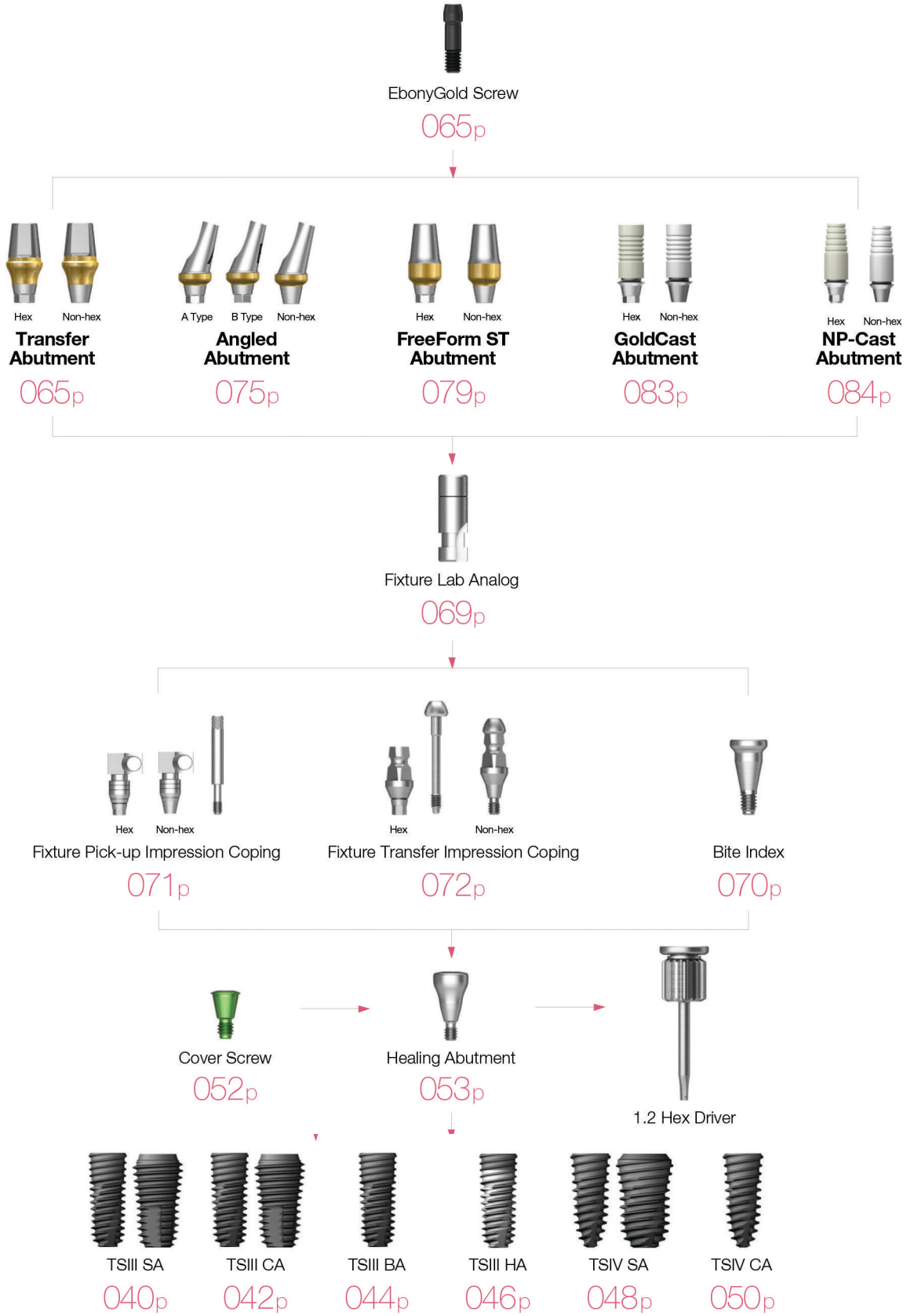

Transfer Abutment

- Used in producing cement-retained prosthetics
- Gold coloring on gingiva region for improved aesthetics
- 1.2 hex driver
- Recommended tightening torque : 20Ncm(mini), 30Ncm(regular)
- Packing unit : abutment + EbonyGold screw

※ TS transfer abutments and TS rigid abutments have the same margin upper form. Therefore, all components used in TS rigid abutments can be used in TS transfer abutments

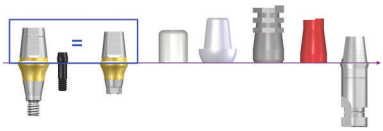

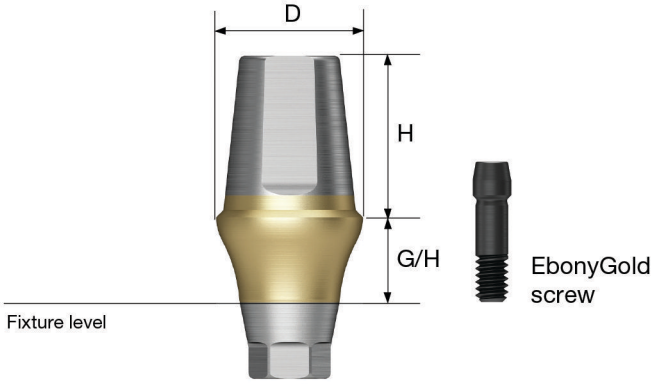

Abutment + EbonyGold screw order code
: product code + **WH** (ex : GSTA4621**WH**)

D ø4.5

M

EbonyGold screw
: GSABSM

		H \ G/H	1.0	2.0	3.0	4.0	5.0
Hex	5.5		GSTA4611	GSTA4621	GSTA4631	GSTA4641	GSTA4651
	7.0		GSTA4711	GSTA4721	GSTA4731	GSTA4741	GSTA4751
Non-Hex	5.5		GSTA4611N	GSTA4621N	GSTA4631N	GSTA4641N	GSTA4651N
	7.0		GSTA4711N	GSTA4721N	GSTA4731N	GSTA4741N	GSTA4751N

D ø4.5

R

EbonyGold screw
: GSABSS

		H \ G/H	1.0	2.0	3.0	4.0	5.0
Hex	5.5		GSTAS4611	GSTAS4621	GSTAS4631	GSTAS4641	GSTAS4651
	7.0		GSTAS4711	GSTAS4721	GSTAS4731	GSTAS4741	GSTAS4751

D ø5.0

R

EbonyGold screw
: GSABSS

		H \ G/H	1.0	2.0	3.0	4.0	5.0
Hex	4.0		GSTA5410	GSTA5420	GSTA5430	GSTA5440	GSTA5450
	5.5		GSTA5610	GSTA5620	GSTA5630	GSTA5640	GSTA5650
	7.0		GSTA5710	GSTA5720	GSTA5730	GSTA5740	GSTA5750

D ø6.0

R

EbonyGold screw
: GSABSS

		H \ G/H	1.0	2.0	3.0	4.0	5.0
Hex	4.0		GSTA6410	GSTA6420	GSTA6430	GSTA6440	GSTA6450
	5.5		GSTA6610	GSTA6620	GSTA6630	GSTA6640	GSTA6650
	7.0		GSTA6710	GSTA6720	GSTA6730	GSTA6740	GSTA6750

D ø7.0

R

EbonyGold screw
: GSABSS

		H \ G/H	1.0	2.0	3.0	4.0	5.0
Hex	5.5		GSTA7610	GSTA7620	GSTA7630	GSTA7640	GSTA7650

Angled Abutment

- Used when a prosthetic's path adjustment is necessary at 17° axial angle
- Gold coloring for aesthetics
- 12 orientation choices with two types of hexes, A and B
- Accurate hex type abutment selection by using an abutment selector
- 1.2 hex driver
- Recommended tightening torque : 20Ncm(mini), 30Ncm(regular)
- Packing unit : abutment + EbonyGold screw

Abutment + EbonyGold screw order Code
: product code + **WH** (ex : GSAA5020A**WH**)

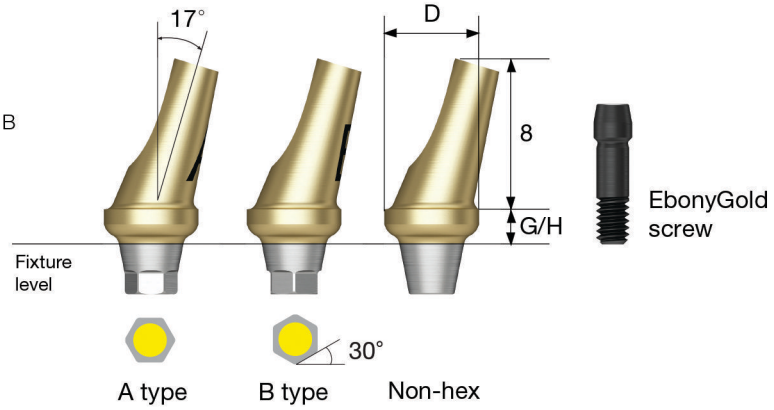

D Ø4.0

M

EbonyGold screw
: GSABSM

G/H	2.0			4.0		
Type	Hex A	Hex B	Non-Hex	Hex A	Hex B	Non-Hex
	GSAA4020MA	GSAA4020MB	GSAA4020MN	GSAA4040MA	GSAA4040MB	GSAA4040MN

D Ø4.5

M

EbonyGold screw
: GSABSM

G/H	2.0			4.0		
Type	Hex A	Hex B	Non-Hex	Hex A	Hex B	Non-Hex
	GSAA4520MA	GSAA4520MB	GSAA4520MN	GSAA4540MA	GSAA4540MB	GSAA4540MN

D Ø4.5

R

EbonyGold screw
: GSABSS

G/H	2.0			4.0		
Type	Hex A	Hex B	Non-Hex	Hex A	Hex B	Non-Hex
	GSAA4520A	GSAA4520B	GSAA4520N	GSAA4540A	GSAA4540B	GSAA4540N

D Ø5.0

R

EbonyGold screw
: GSABSS

G/H	2.0			4.0		
Type	Hex A	Hex B	Non-Hex	Hex A	Hex B	Non-Hex
	GSAA5020A	GSAA5020B	GSAA5020N	GSAA5040A	GSAA5040B	GSAA5040N

D Ø6.0

R

EbonyGold screw
: GSABSS

G/H	2.0			4.0		
Type	Hex A	Hex B	Non-Hex	Hex A	Hex B	Non-Hex
	GSAA6020A	GSAA6020B	GSAA6020N	GSAA6040A	GSAA6040B	GSAA6040N

Multi Abutment Components

Multi Abutment Outer Driver

• Multi abutment 전용 torque driver

MAOD

Multi Abutment Machine Driver

• Multi abutment 전용 machine driver

MAMD

Multi Angled Abutment NEW 2014.04

- Used in implant path compensation in screw retained multiple case
- Up to 60° path compensation (two implant standard)
- Prosthetic production using US aesthetic-low cylinder(non-hex)
- Recommended tightening torque : 20Ncm(mini), 30Ncm(regular)
- Packing unit : multi angled abutment + EbonyGold screw

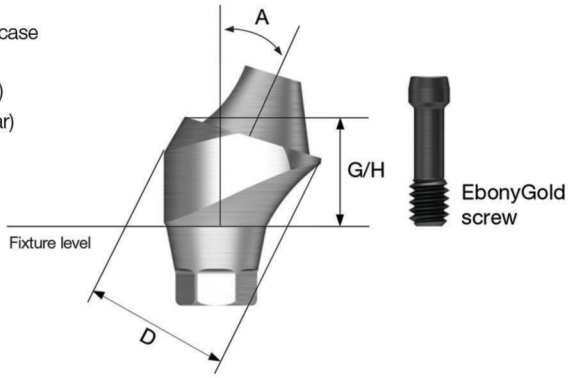

Abutment + EbonyGold screw order code
: product code + **WH** (ex : GS17MAS4840**WH**)

D ø4.8

M

EbonyGold screw
: GSMABSM

Angle \ G/H	2.5	3.0	4.0
17°	 GS17MAM**4820**	 GS17MAM**4830**	 GS17MAM**4840**

Angle \ G/H	3.5	4.0	5.0
30°	 GS30MAM**4830**	 GS30MAM**4840**	 GS30MAM**4850**

D ø4.8

R

EbonyGold screw
: GSMABSS

Angle \ G/H	2.5	3.0	4.0
17°	 GS17MAS**4820**	 GS17MAS**4830**	 GS17MAS**4840**

Angle \ G/H	3.5	4.0	5.0
30°	 GS30MAS**4830**	 GS30MAS**4840**	 GS30MAS**4850**

ZioCera Abutment

- Zirconia material with superior biocompatibility
- Advantageous in aesthetic prosthetics due to having similar color with natural teeth
- 1.2 hex driver
- Recommended tightening torque : 20Ncm(mini), 30Ncm(regular)
- Packing unit : abutment + EbonyGold screw

Abutment + EbonyGold screw order code
: product code + **WH** (ex : GSZAS5535N**WH**)

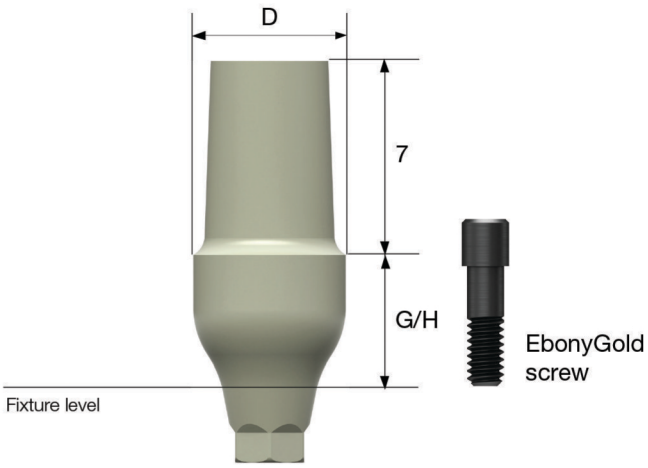

Rigid Abutment

- Used in producing cement-retained prosthetics
- Gold coloring on gingiva region for improved aesthetics
- Outer driver : ø 4.0 (242p)
- Outer driver or 1.2 hex driver : ø 4.5, ø 5.0, ø 6.0
- 1.2 hex driver : ø 7.0
- Recommended tightening torque : 30Ncm
- Packing unit : abutment + protect cap

Abutment + protect cap order code
: product code + **P** (ex : GSRA5620**P**)

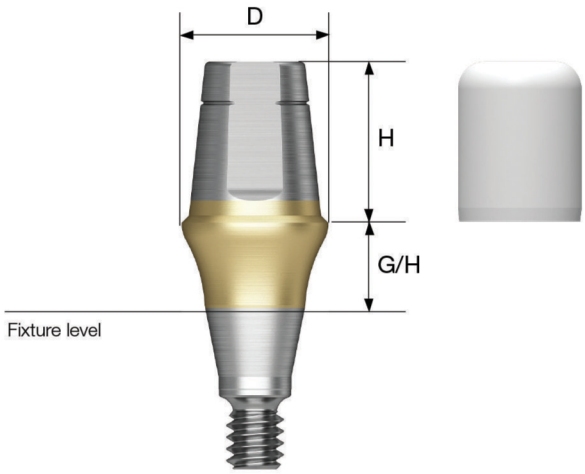

NP-Caste Abutment

- Used in producing screw-retained prosthetics
- Used when path, aesthetics, or space have limitations
- After customization, prosthetic must be produced by casting using dental-quality gold alloy
- Abutment region fusion range : 1400˚C~1550˚C
- 1.2 hex driver
- Recommended tightening torque : 20Ncm(mini), 30Ncm(regular)
- Packing unit : abutment + EbonyGold screw

Abutment + EbonyGold screw oOrder code
: product code + **WH** (ex : GSNA4510S**WH**)

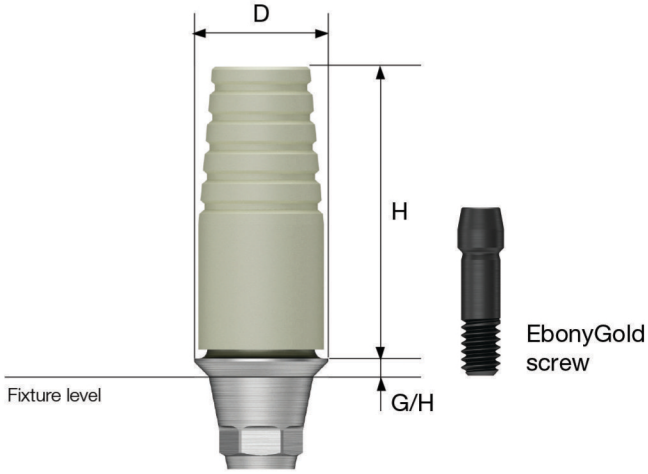

GoldCast Abutment

- Used in producing screw-retained prosthetics
- Used when path, aesthetics, or space have limitations
- After customization, prosthetic must be produced by casting using dental-quality gold alloy
- Abutment region fusion range : 1400˚C~1450˚C (casting with non-precious metal alloys is incompatible)
- 1.2 hex driver
- Recommended tightening torque : 20Ncm(mini), 30Ncm(regular)
- Packing unit : abutment + EbonyGold screw

Abutment + EbonyGold screw order code
: product code + **WH** (ex : GSGA4510S**WH**)

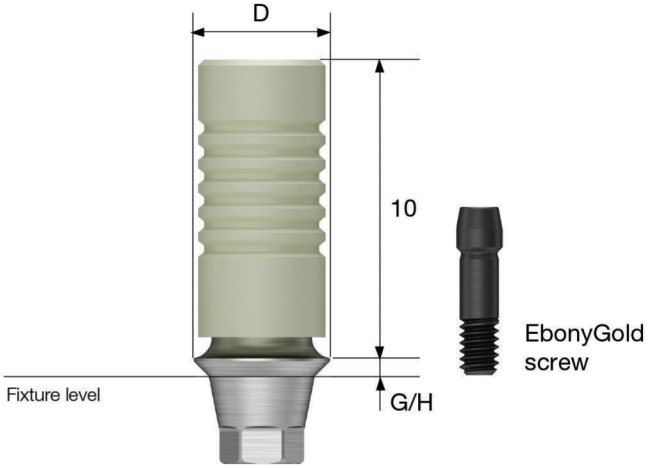

FreeForm ST Abutment

- Used when an abutment's path must be altered or a prosthetic's margin area must be customized
- Gold coloring on gingiva region for aesthetics
- Recommended tightening torque : 20Ncm(mini), 30Ncm(regular)
- Packing unit : abutment + EbonyGold screw

Abutment + EbonyGold screw order code
: pcode + **WH** (ex : GSFA5015**WH**)

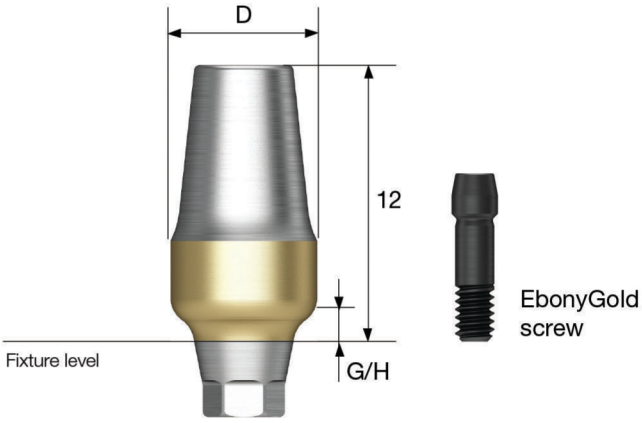

Convertible Abutment

- Used in producing prosthetics in bridge cases where path is not aligned
- O-ring abutment driver : ø 4.0 (AORD)
- Octa abutment driver : ø 5.0, ø 6.0 (244p)
- Recommended tightening torque : 30Ncm
- Packing unit : abutment + carrier

Abutment + carrier order code
: product code + **P** (ex : GSCA5030**P**)

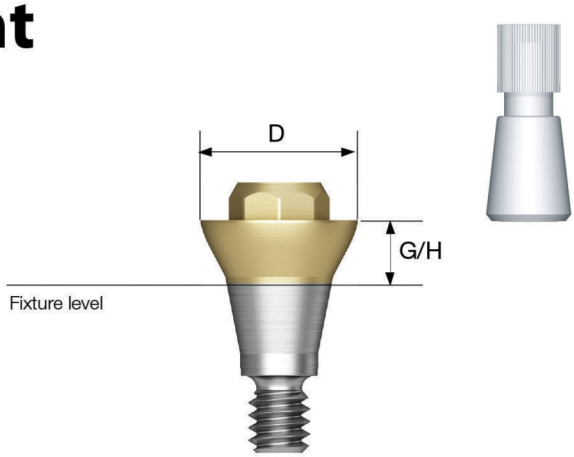

PROSTHETIC FLOW DIAGRAM 6

Stud / Locator®

Overdenture

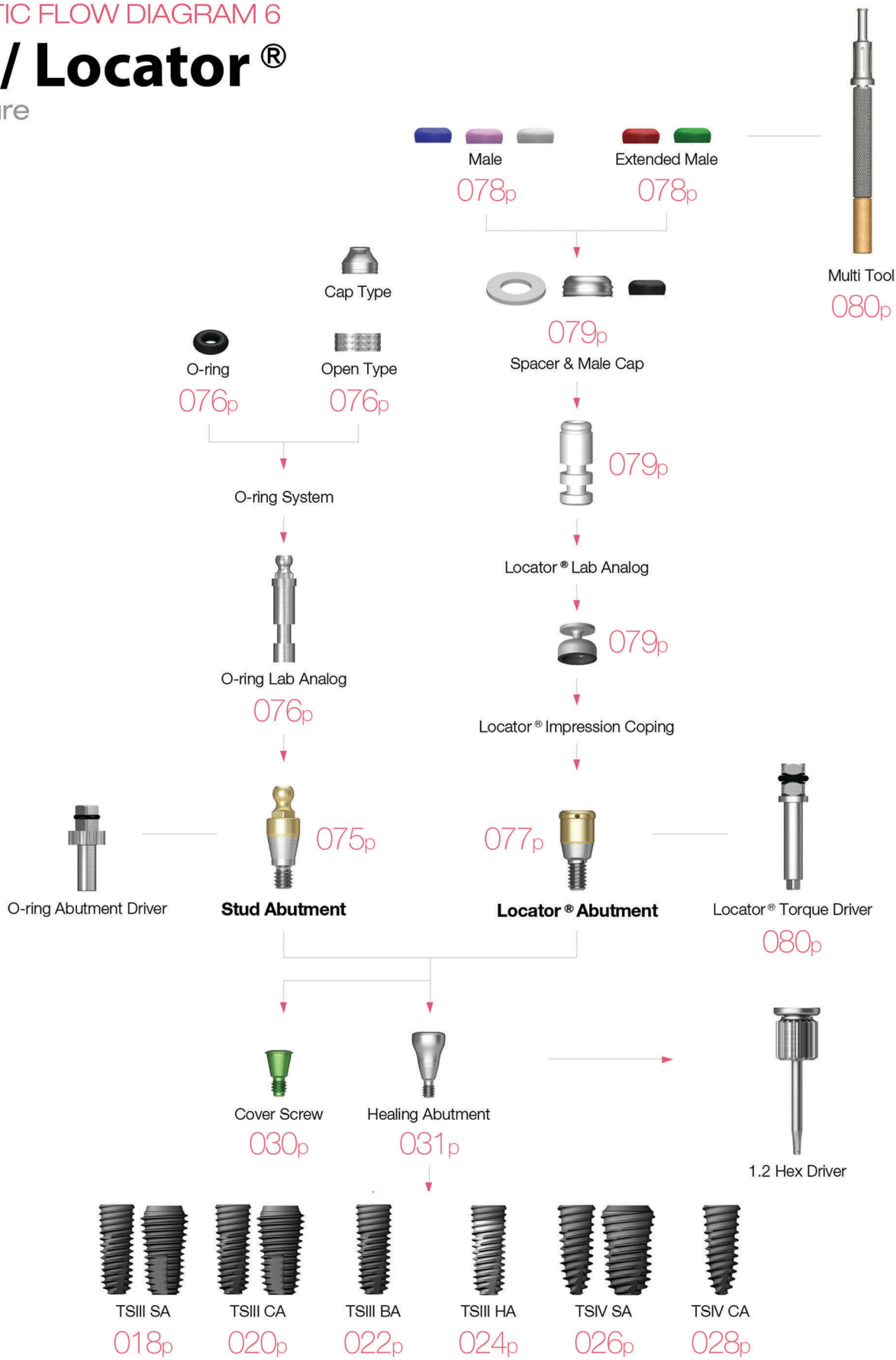

Stud Abutment

- Used in creating stud type overdenture prosthetics
- Compensates the path up to 20°
- O-ring abutment driver (AORD)
- Recommended tightening torque : 30Ncm

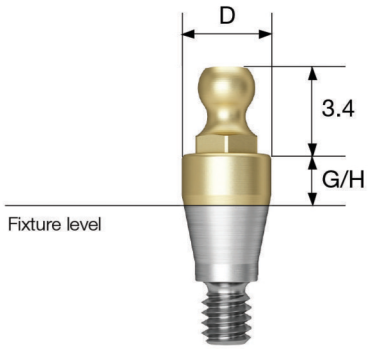

D Ø3.5

M

G/H	1.0	2.0	3.0	4.0	5.0	6.0
	GSSAM**3510**	GSSAM**3520**	GSSAM**3530**	GSSAM**3540**	GSSAM**3550**	GSSAM**3560**

D Ø3.5

R

G/H	1.0	2.0	3.0	4.0	5.0	6.0
	GSSA**3510**	GSSA**3520**	GSSA**3530**	GSSA**3540**	GSSA**3550**	GSSA**3560**

Locator Abutment

- Achieves low vertical dimension, stability, and various attachments with retention
- Possible path compensation up to 40° (two implant standard)
- Tightening by using a locator torque driver
- Recommended tightening torque : 30Ncm

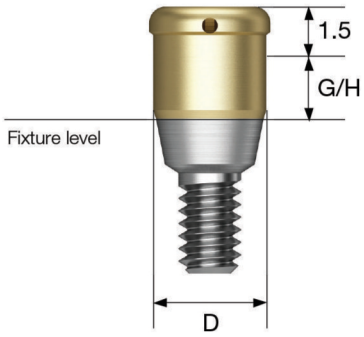

D Ø3.7

M

G/H	1.0	2.0	3.0	4.0	5.0
	HGLCA**3510M**	HGLCA**3520M**	HGLCA**3530M**	HGLCA**3540M**	HGLCA**3550M**

D Ø3.7

R

G/H	1.0	2.0	3.0	4.0	5.0
	HGLCA**4010S**	HGLCA**4020S**	HGLCA**4030S**	HGLCA**4040S**	HGLCA**4050S**

SmartBuilder - Titanium

SMARTbuilder is a titanium mesh membrane that provides space maintenance necessary for bone augmentation of alveolar bone defects.

- **SMARTbuilder Lateral** is ideal for simple socket extractions, fenestrations and dehiscence cases that require horizontal and/or vertical bone augmentation of the alveolar ridge.
- **SMARTbuilder Papilla** is used to enhance vertical bone augmentation of the alveolar bone up to 1.5mm, restoring the papilla height for esthetically sensitive cases.

SB1
Papilla Builder

SB2
Lateral Builder

SB3
Jaw Builder

123Full KIT (O123FK)

Available for use TSII SA / III SA / III HA | SSII SA / III SA | USII SA / III SA

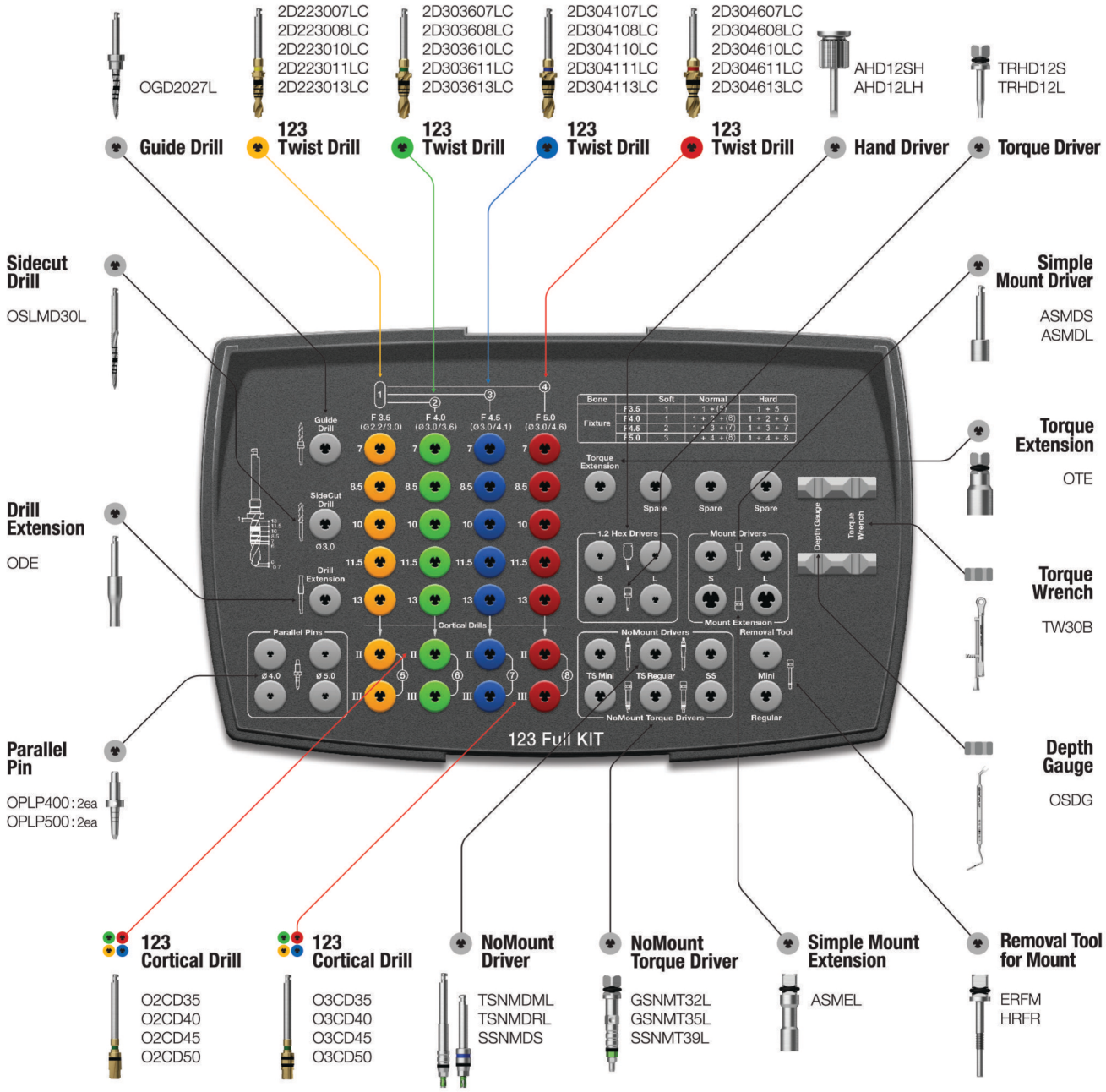

Taper KIT (OTSK) NEW 2014.07

Available for use TSIII SSIII USIII

Torque Wrench
TW30B

Depth Gauge
OSDG

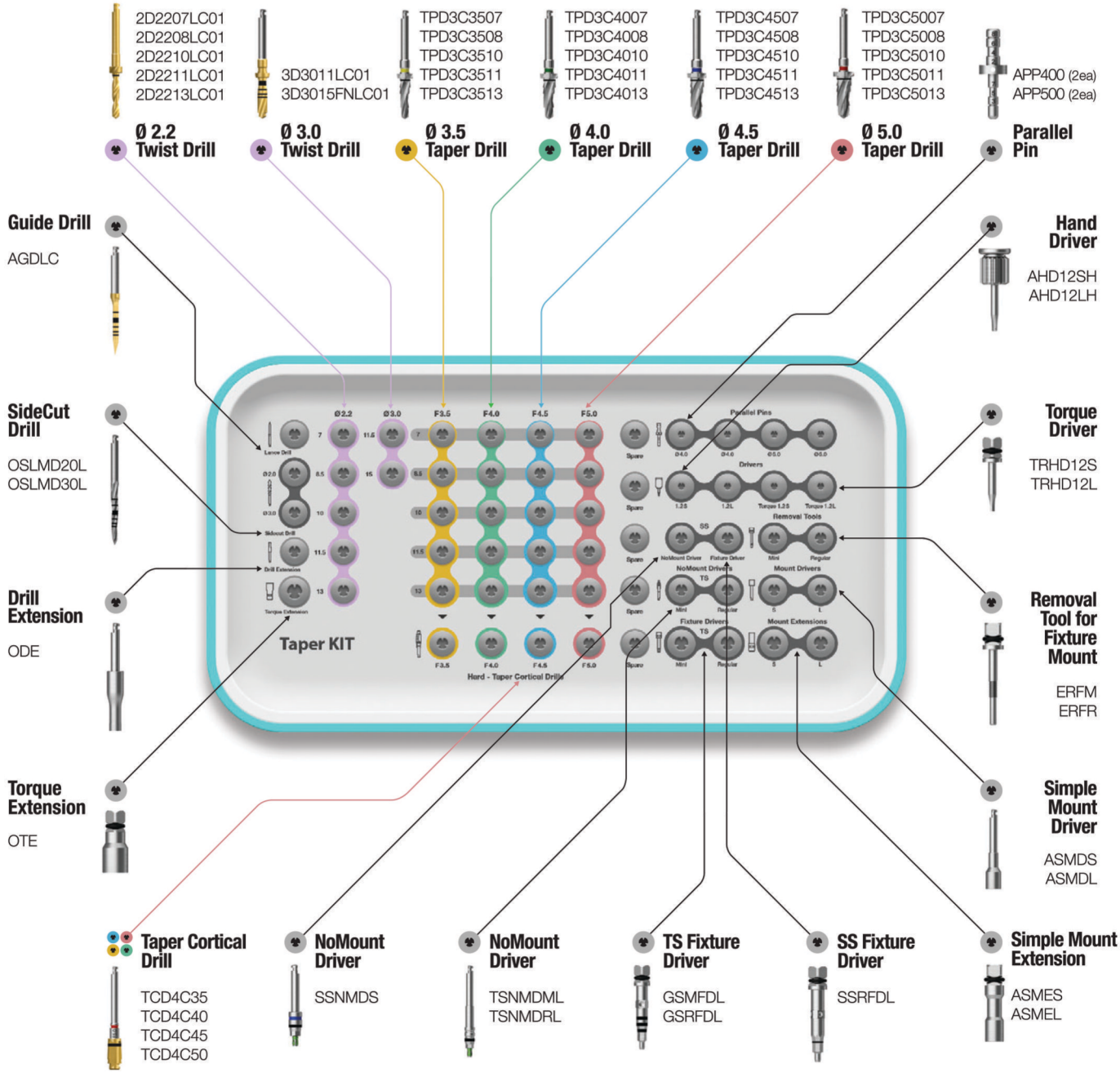

Prosthetic KIT (OPK)

Available for use TSII / III SSII / III USII / III Ultra-wide

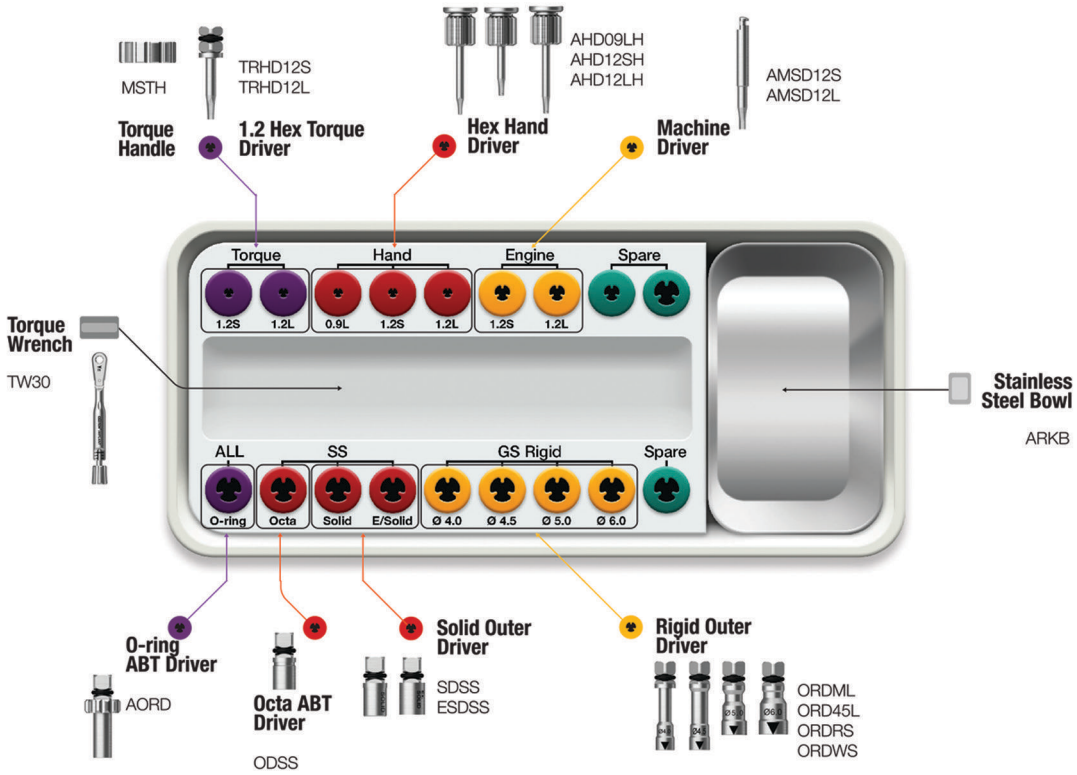

Ultra KIT (HULTRK)

Available for use Ultra-wide

Base component

Open Wrench
SPOW

Ratchet Wrench
RCWC

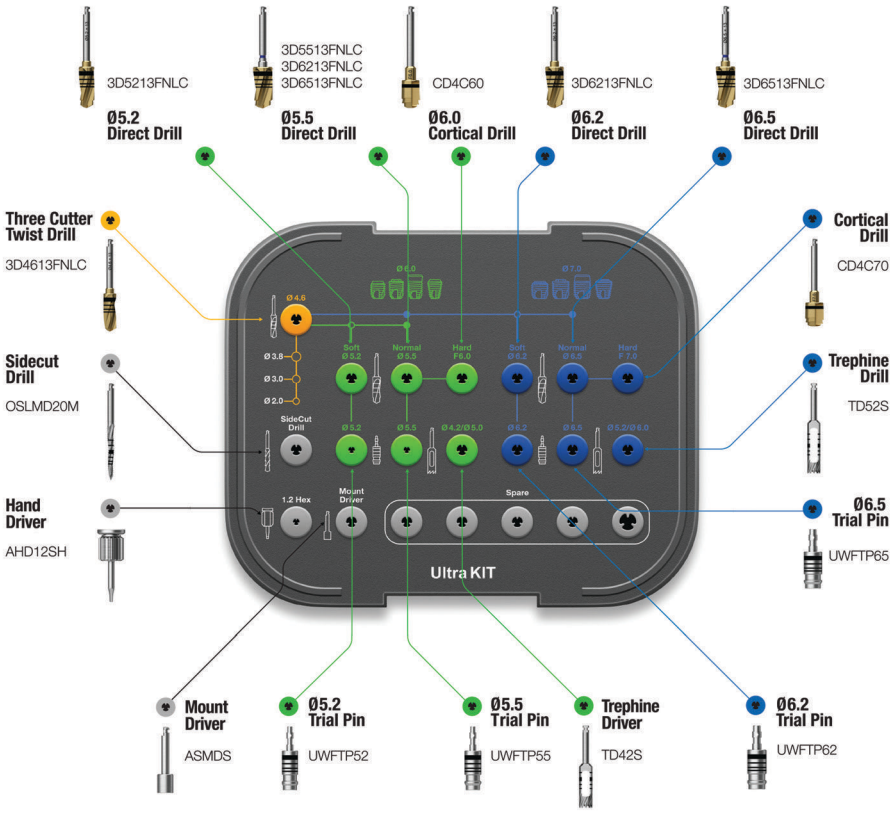

OsstemGuide KIT (OGDK)

- osstem과 hiossen implant의 tapered type implant system OsstemGuide operation-enabled implant: Osstem and Hiossen implant's tapered type implant system

※ If planned implant operation of 7mm or 15mm lengths, applicable drills can be purchased additionally for such operations

Base component

Kit Steel bowl
AKB*

Ratchet Wrench
CITQW-1185A*

Open Wrench
ASOW*

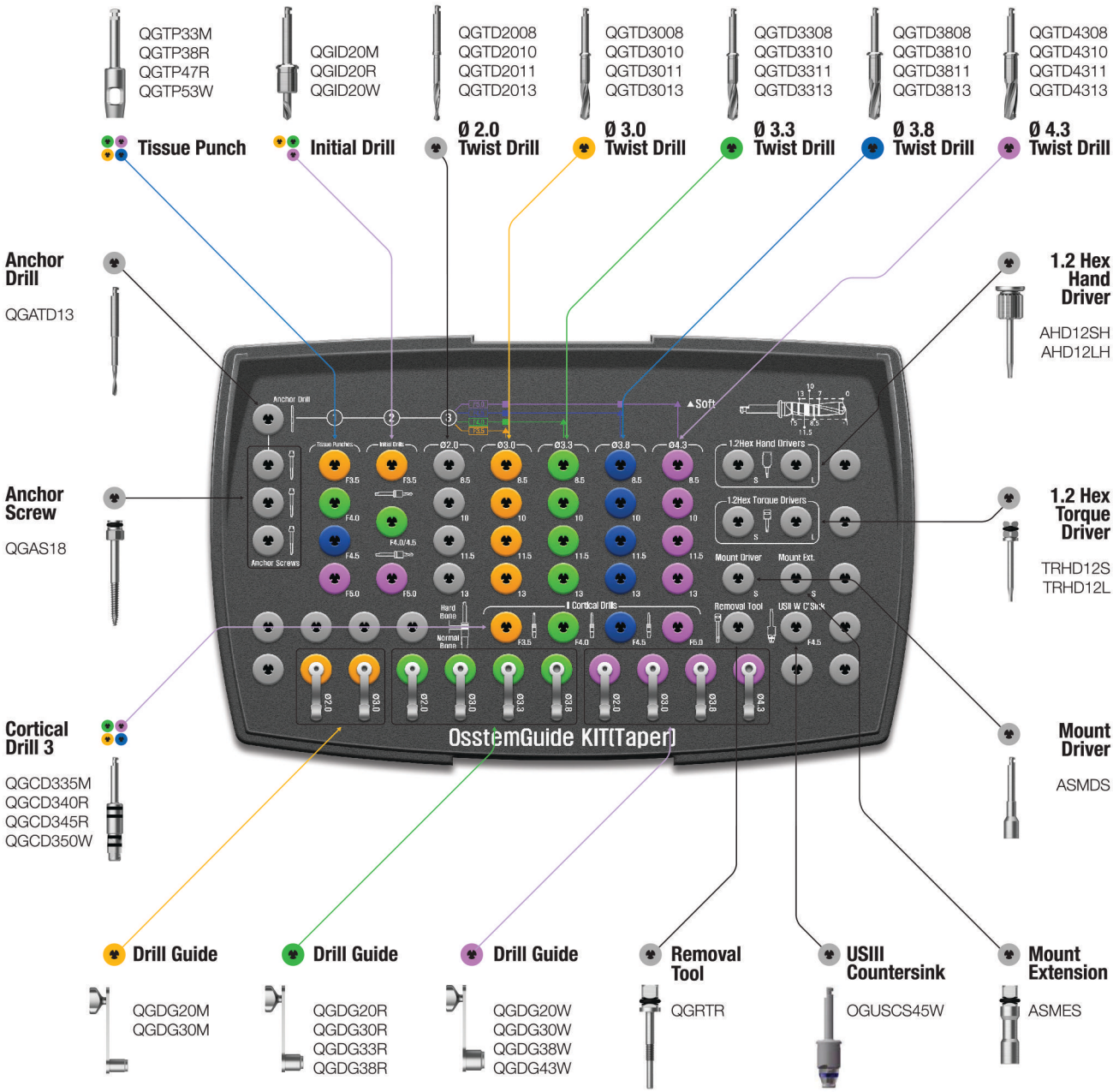

CAS - KIT (HCRSNK)

Available for use TSII / III SSII / III USII / III

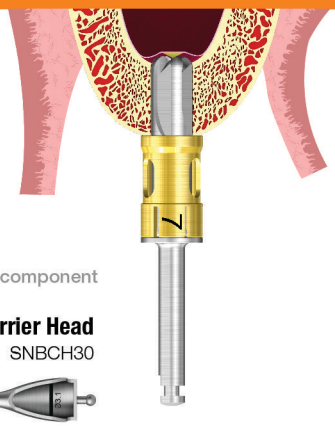

Base component

Bone Carrier
SNBCS35

Bone Carrier Head
SNBCH30

Bone Condenser
SNBC1114

SNDR2813TL
Ø2.8 CAS-Drill

SNDR3113TL
Ø3.1 CAS-Drill

SNDR3313TL
Ø3.3 CAS-Drill

SNDR3613TL
Ø3.6 CAS-Drill

SNDR3813TL
Ø3.8 CAS-Drill

SNDR4113TL
Ø4.1 CAS-Drill

Stopper
SNST7
Yellow

Guide Drill
SNGD2027TL

Stopper
SNST2
SNST8
Purple

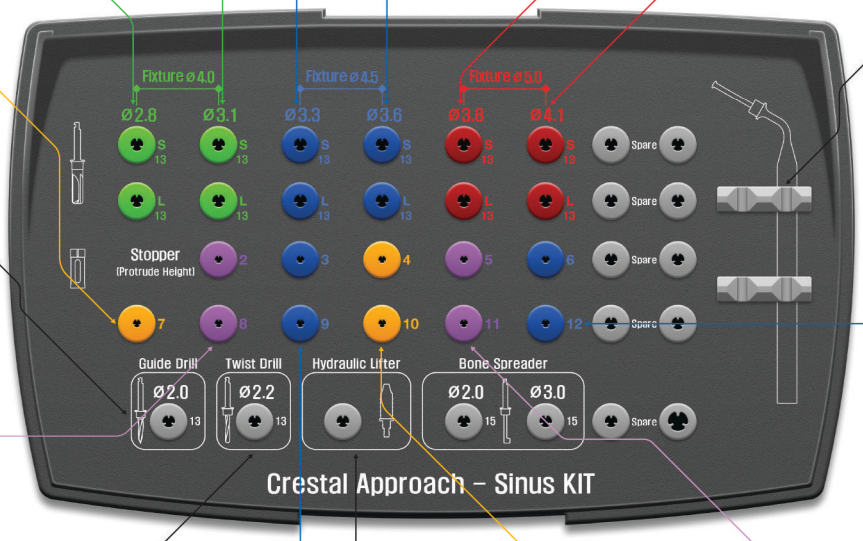

Depth Gauge
SNDG

Stopper
SNST6
SNST12
Blue

Twist Drill
SNGD2027TL

Stopper
SNST3
SNST9
Blue

Hydraulic Membrane Lifter
SNMLS

Stopper
SNST4
SNST10
Yellow

Stopper
SNST5
SNST11
Purple

LAS- KIT (HLRSNK)

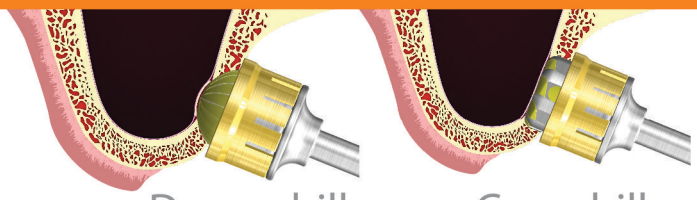

Dome drill Core drill

- Lateral Approach - Sinus KIT (LAS-KIT) is a surgical tool optimized for lateral approach when operating on maxillary sinus
- Dome drill and core drill, which can safely form lateral window, are included and equipped with diameters of ø5.5 and ø7.0, depending on the size of window
- LAS drill is equipped with stopper(0.5mm increment), which enables adjustment of depth, and can safely form window without perforating membrane

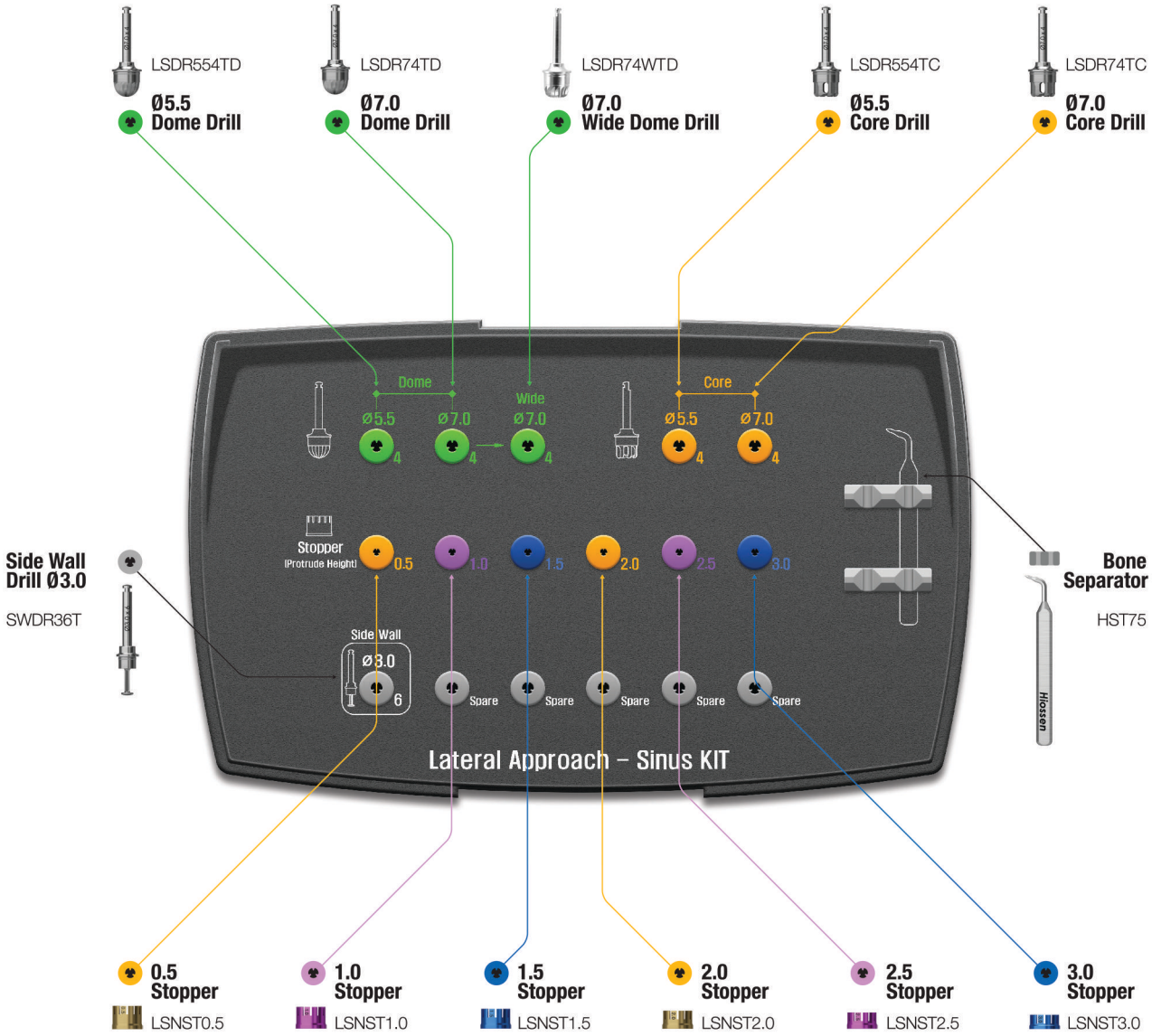

ESSET KIT (HESEK)

Available for use TSII / III SSII / III USII / III

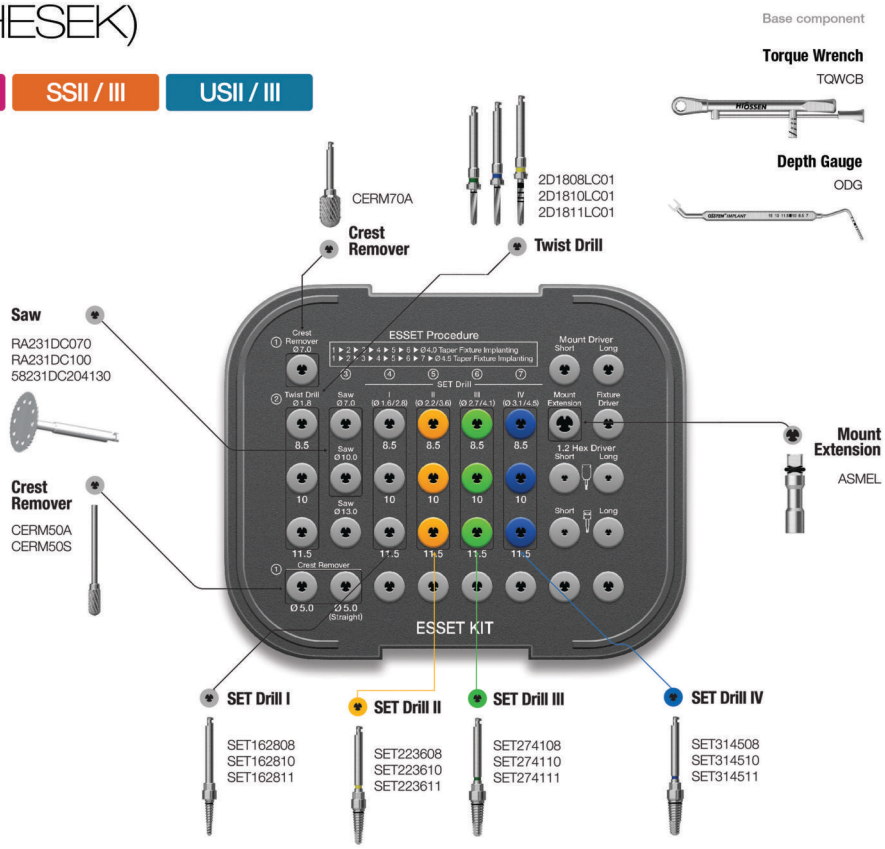

122 Taper KIT (0122TPK)

For TSIII SSIII USIII Implant Systems

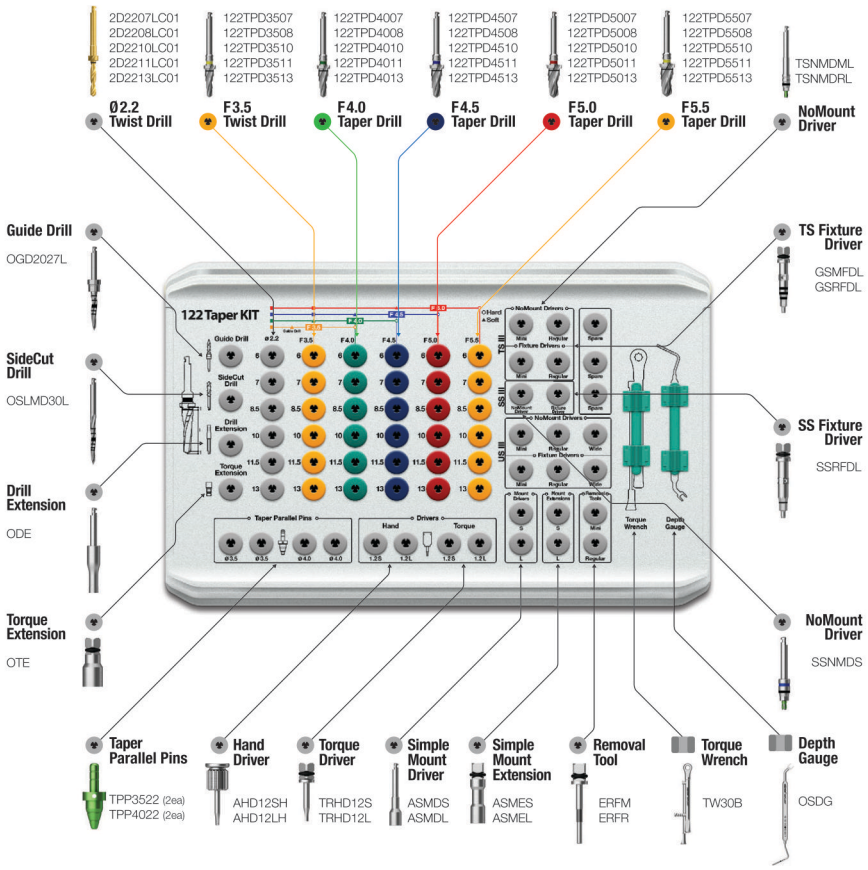

Ridge Split KIT - Offset (ORSOK)

- Chisel: KIT used to expand the ridge of narrowed alveolar bone
- Blade holder: When it is difficult to incise bone using bur in case of poor bone condition, malletting can be done by attaching #15 blade
- Components
  - Ridge split chisel : ORSO15, ORSO20, ORSO25,ORSO30 - Blade holder : ORSBH

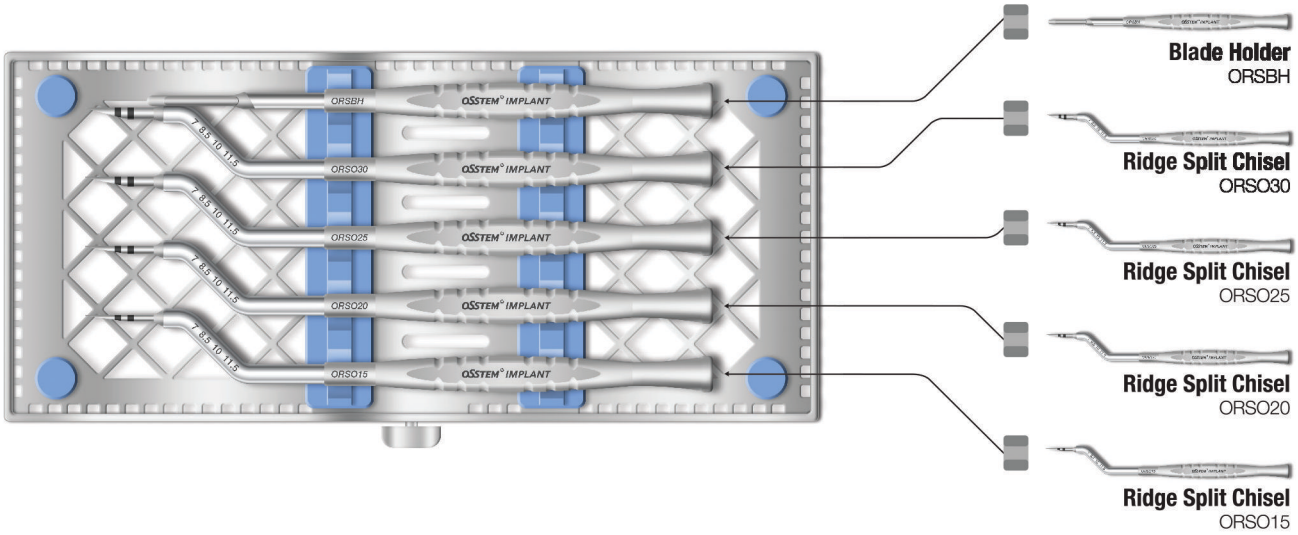

Ridge Split KIT - Straight (ORSSK)

- Chisel: KIT used to expand the ridge of narrowed alveolar bone
- Blade holder: When it is difficult to incise bone using bur in case of poor bone condition, malletting can be done by attaching #15 blade
- Components - Ridge split chisel : ORSS15, ORSS20, ORSS25, ORSS30 - Blade holder : ORSBH

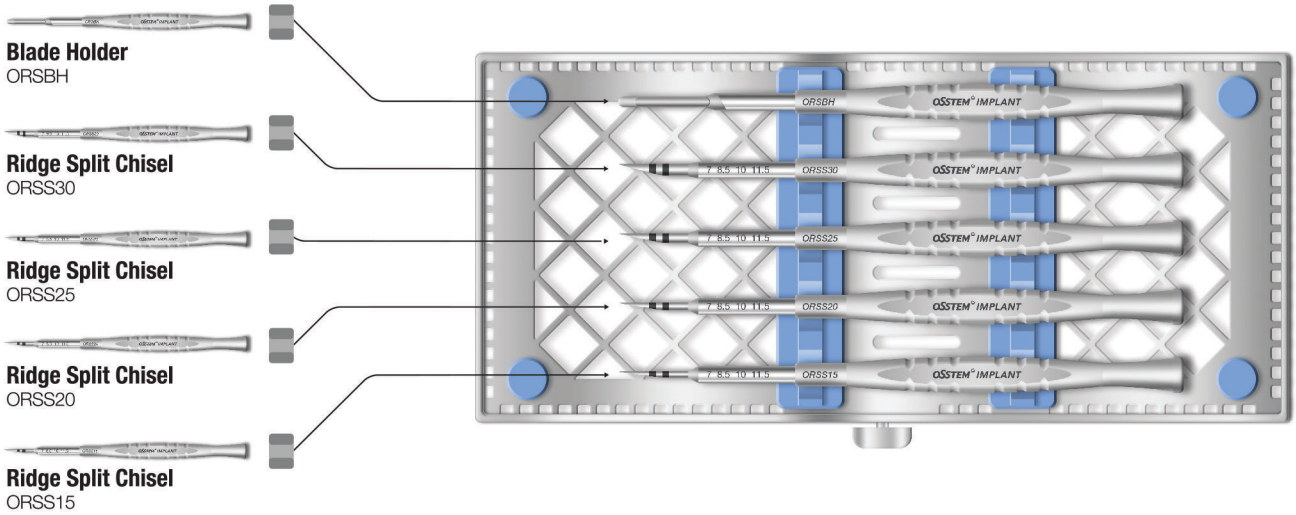

Osteo KIT (OSTK)

- KIT Concave osteotome: KIT used for maxillary sinus floor augmentation to increase the amount of alveolar bone that can be used within maxillary molar area vertically
- KIT Expanding osteotome: KIT used to increase initial stability of implant by preserving bone and densifying trabecular bone to compensate for bone removal in poor bone condition
- Features stopper for adjusting depth of procedure

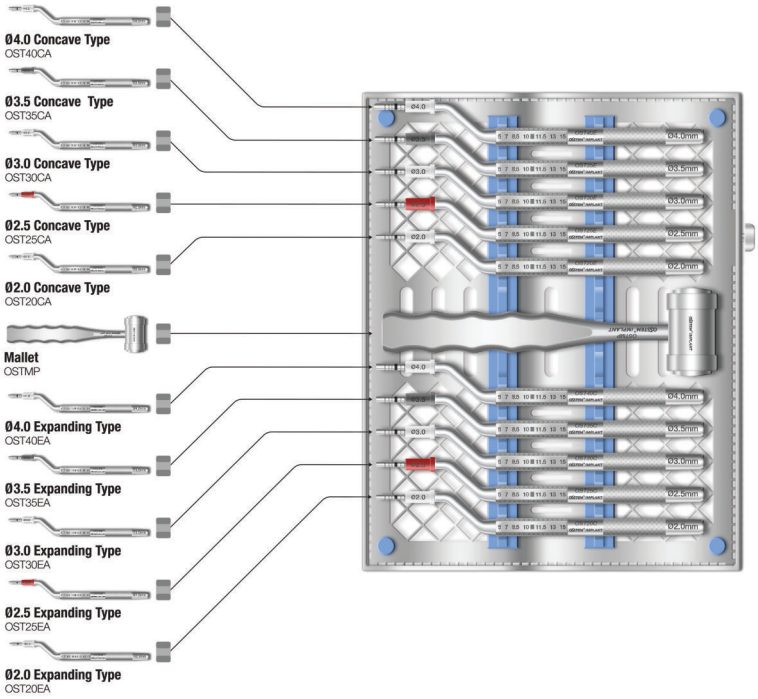

Parallel Guide KIT

Prime KIT: OPGPK (optional tools are not included)
Advanced KIT: OPGAK (optional tools are all included)

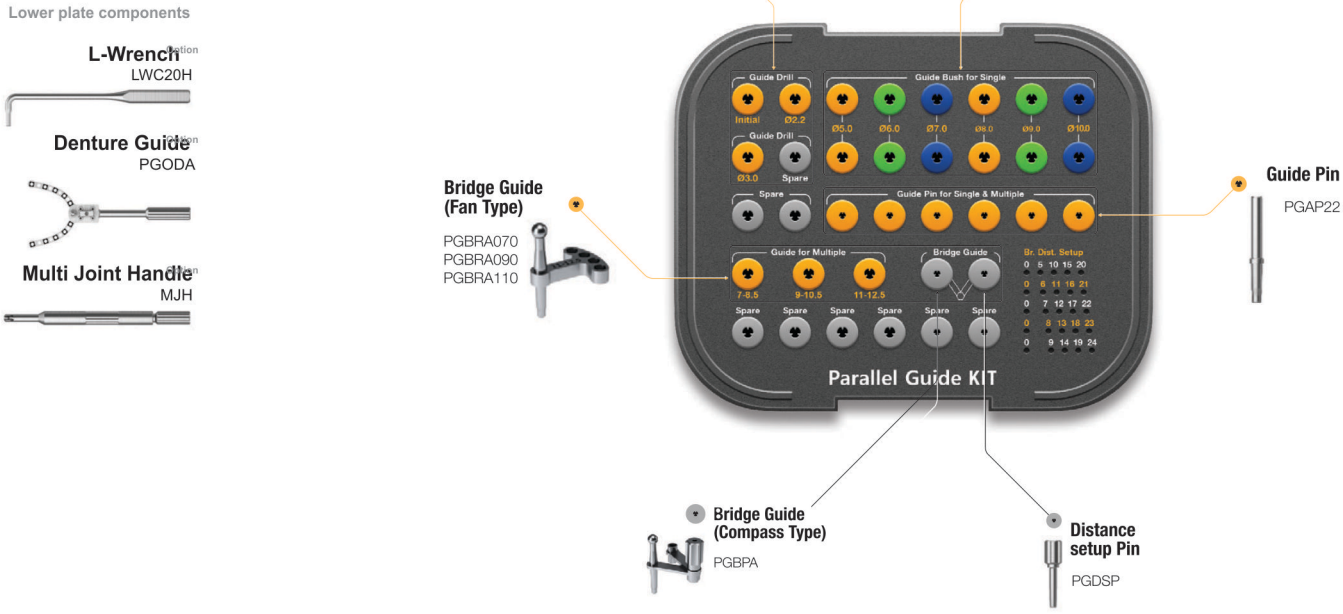

Osteotom KIT (AOST)

- KIT KIT for maxillary sinus floor augmentation to increase the amount of alveolar bone that can be used within maxillary molar area vertically
- Only includes concave type
- Features stopper for adjusting depth of procedure

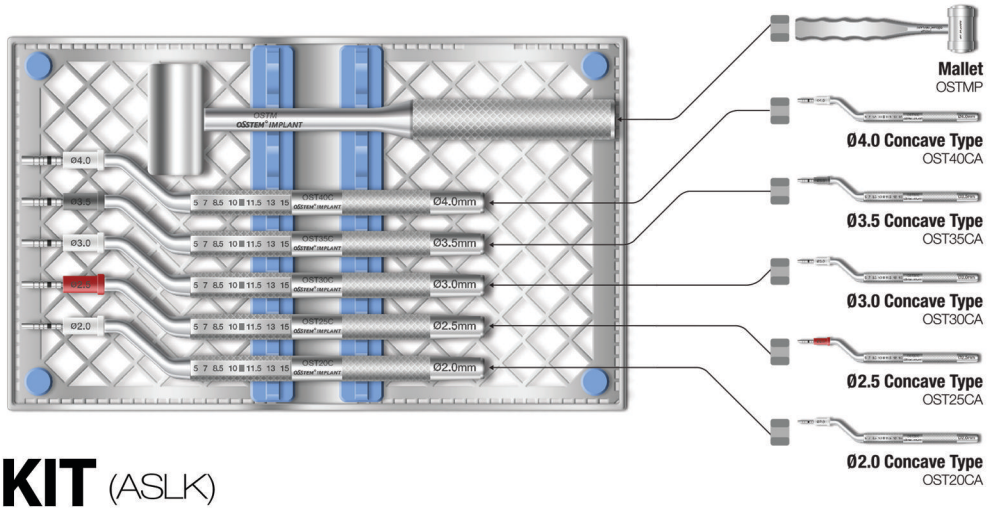

Sinus KIT (ASLK)

- Various tools used for maxillary sinus membrane elevation and grafting procedure
- Sinus procedure tool for lateral approach
- Components (5 types)
  - Freer elevator : OFE
  - Bone graft carrier : OBGC
  - Membrane separator (circle type) : OMSC
  - Sinus currette-short : OSCS
  - Sinus currette-long : OSCL

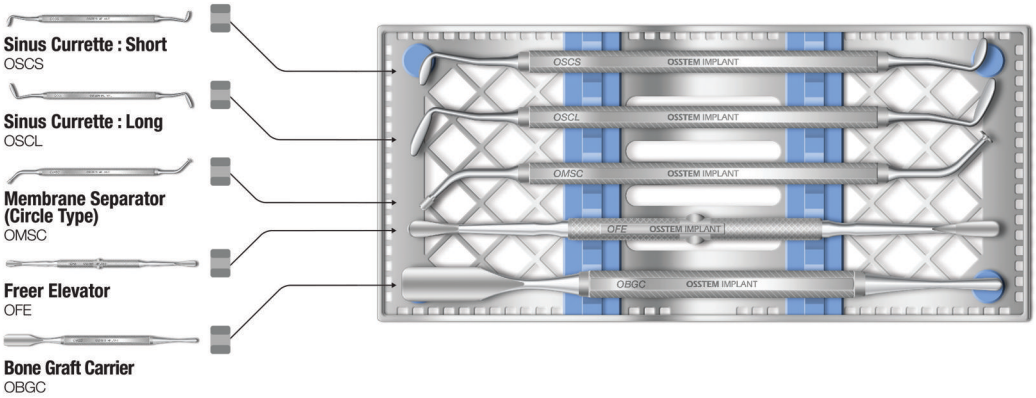

Bone Spreader KIT (OBSOK)

- KIT used to expand the ridge of narrowed alveolar bone
- Offset type for convenient procedures
- Components (4 types)
  - OBSO22F, OBSO28F, OBSO35F, OBSO35R

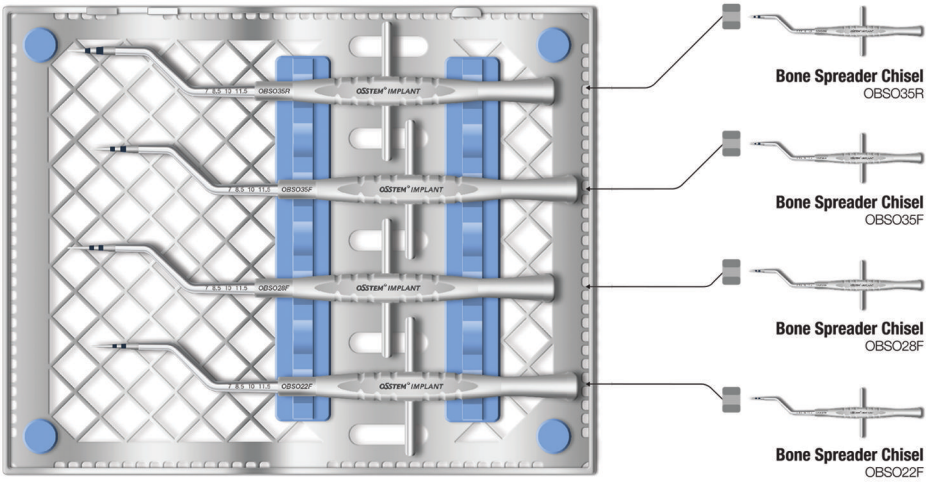

Bone Screw KIT (BSSTKT)

Available for use BS

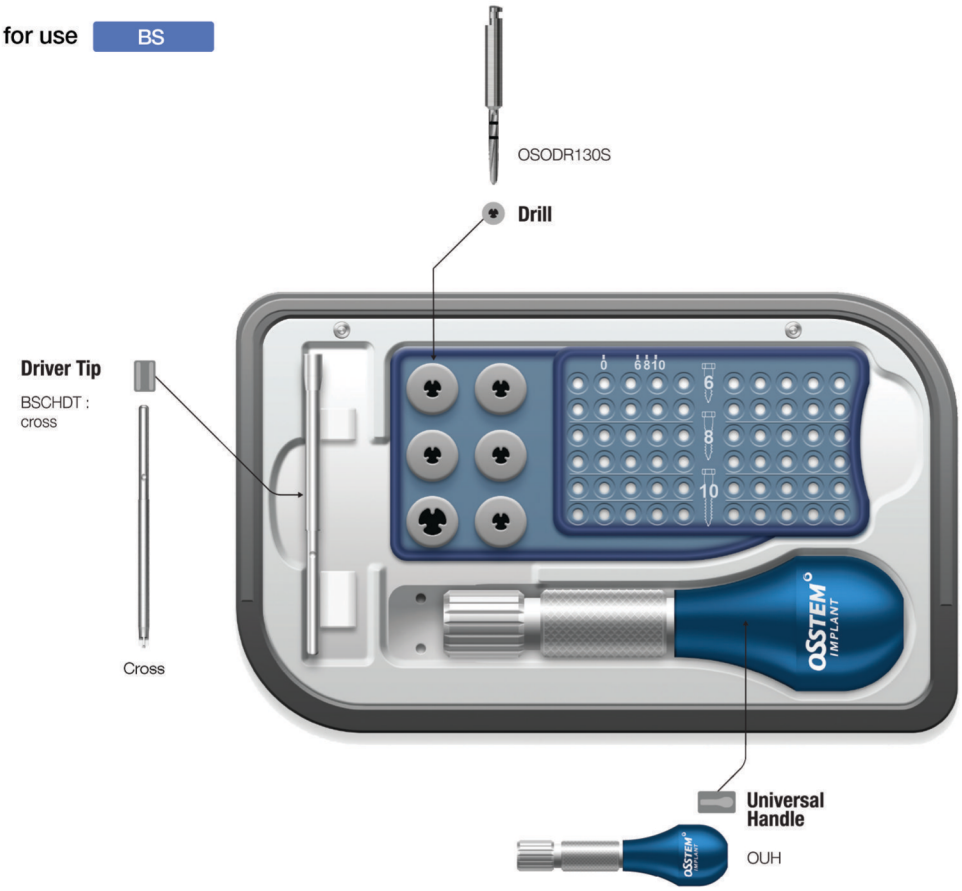

Bone Mill

- Forms particulate bone with autogenous bone collected

ABM

Machine Driver Handle

- Can turn by hand, connecting all operation tools for engine

OMDH

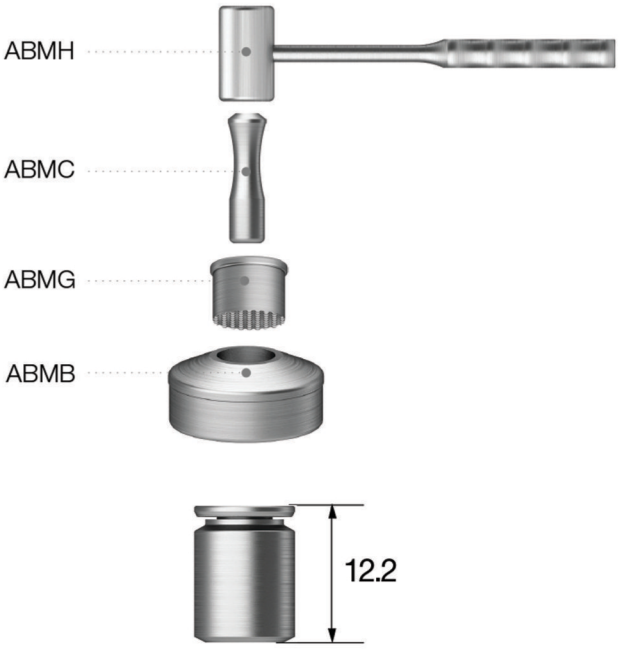

ESR KIT Easy Screw Removal KIT (OESRK)

Base component

Abutment Removal Tip
OARTML OARTRL

Slot Driver
OTSD07

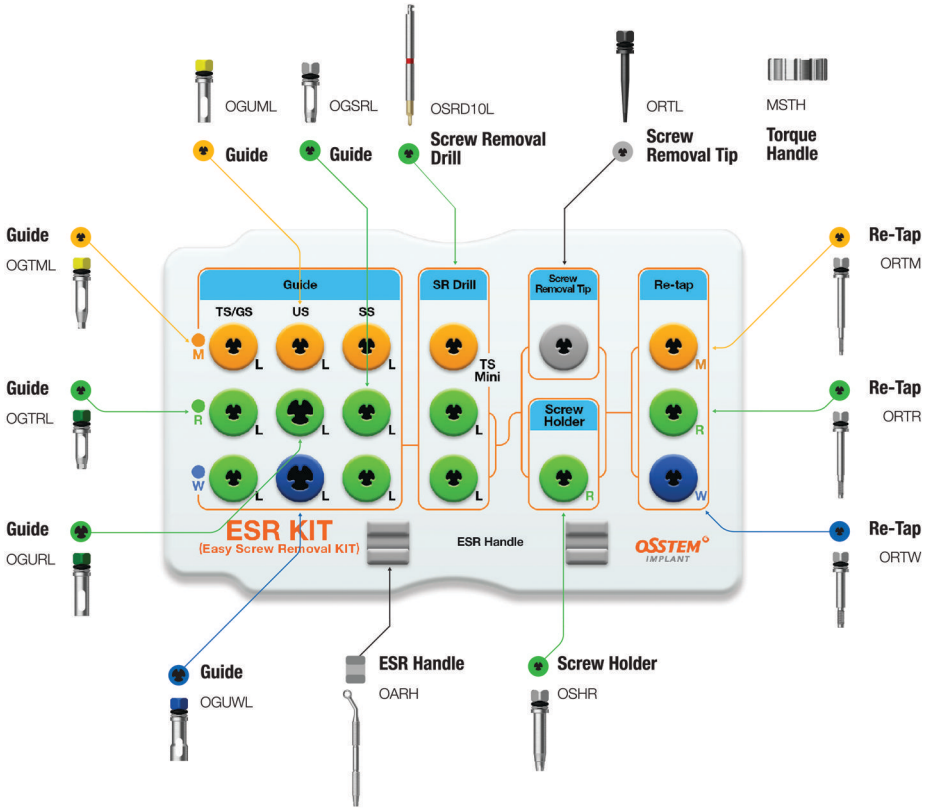

EFR KIT Easy Fixture Removal KIT (OSFRK)

Available for use TSII / III SSII / III USII / III Ultra-wide

Base component

Fixture Wrench
FRDFE

Torque Wrench
TW400B

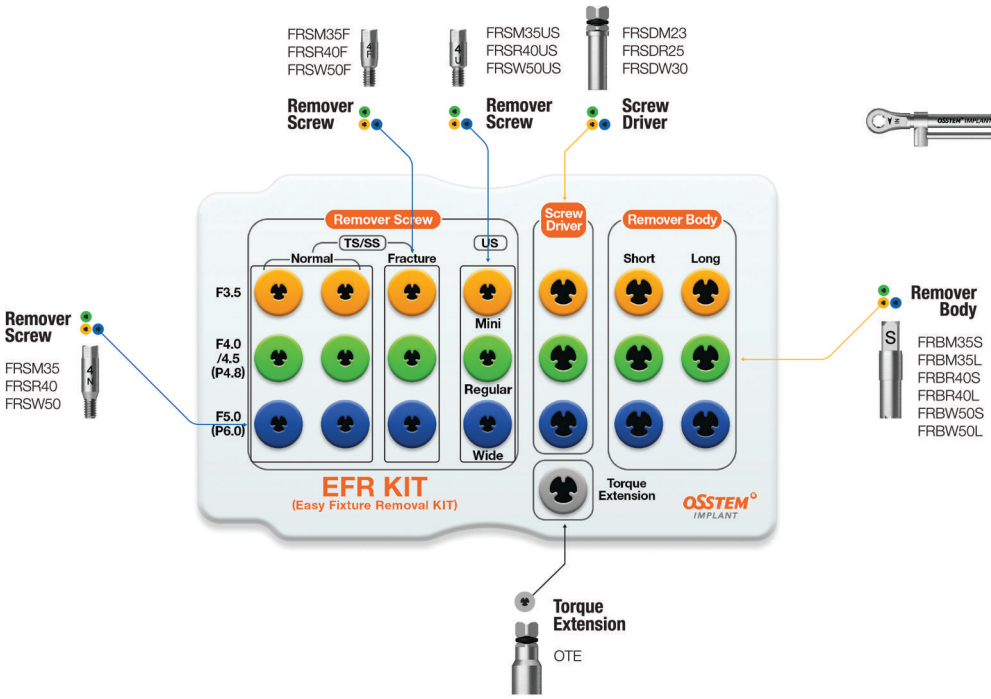

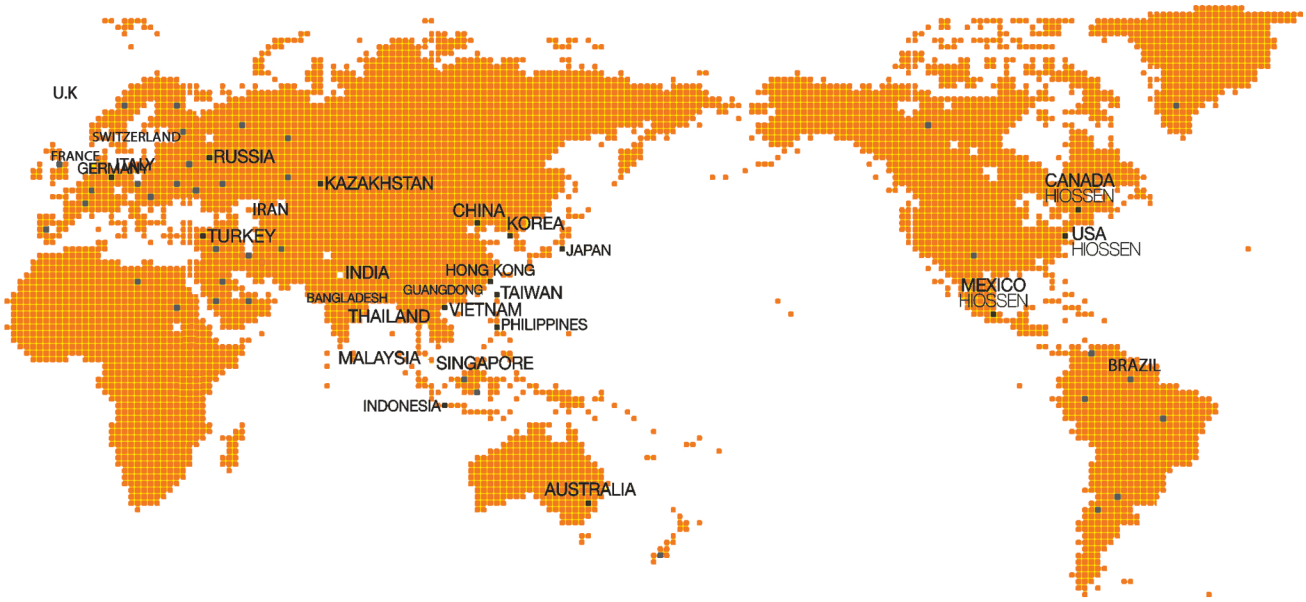

OSstem ایمپلنتی جهانی است.

شرکت ایمپلنت oSstem در سال ۱۹۹۵ با شعار " سلامت و معیشت برای همه " تاسیس شد. ابداع روشهای نوین جراحی ایمپلنت ، ساده سازی جراحی ایمپلنت ، کیفیت فوق العاده ، استاندارد سازی کلیه مراحل تولید ، سرمایه گذاری بر تحقیق و توسعه، ایجاد بزرگترین مرکز آموزش ایمپلنت آسیا AIC و تلاشهای بی وقفه تیم رهبران oSstem خیلی زود این ایمپلنت را در قامت یک رهبر جهانی در حوزه تولیدات با کیفیت و آموزش های مدون پر آوازه کرد.

موفقیتهای جهانی oSstem

۱. ساده سازی روشهای جراحی ایمپلنت
۲. موفقیت درمانی فوق العاده ۹۹.۸ ٪
۳. پشتیبانی بیش از ۵۰۰ مقاله علمی و پایان نامه دانشگاهی و همکاری با بیش از ۱۰۰ دانشکده دندانپزشکی برتر دنیا
۴. پیشگام در طراحی بایومکانیک و بایولوژیک نسل جدید فیکسچر و قطعات پروتزی
۵. همکاری علمی و بازرگانی با بیش از ۲۰ شرکت بزرگ پزشکی و دندانپزشکی دنیا
۶.تاسیس ۲۱ شعبه ، ۳ کارخانه در کره جنوبی، آلمان و آمریکا و ایجاد دفاتر نمایندگی در ۱۱۰ کشور دنیا
۷. کسب بیش از ۱۰٪ بازار جهانی ایمپلنت و برنامه ریزی برای کسب رتبه برترین ایمپلنت جهانی در سال ۲۰۲۳
۸. ایجاد یکی از بزرگترین مراکز آموزش ایمپلنت دنیا AIC به منظور تربیت ایمپلنتولوژیستهای شایسته و حرفه ای
۹. اولین ایمپلنت آسیا و برند مطمئن و نام آشنای جهانی در بازارهای بزرگ آمریکا ، اروپا و استرالیا
۱۰. سیستم موثر و رضایت بخش خدمات پس از فروش و گارانتی مادام العمر موفقیت درمان
۱۱. تنوع بسیار بالای انواع فیکسچر و قطعات پروتزی برای طرح درمان های گوناگون متناسب با شرایط انواع استخوان و گزینه های پروتزی

آزاد تجارت پارس
AZAD TEJARAT PARS